9301
ROUND SHOWER SET

equate

PRODUCT SPECIFICATION

Product Code:	9301
Finish:	Chrome
Product Type:	Contemporary Shower
Construction:	Body: Brass, Handles: ABS, Riser: SS, Handset: ABS, Top Head: SS, Hose: SS
Cartridge Type:	Thermostatic cartridge and divertor
Inlet Connections:	3/4" BSP
Outlet Connections:	1/2"BSP
Fitting Dimensions:	150mm inlet centres
Gross Weight (kg):	4.4

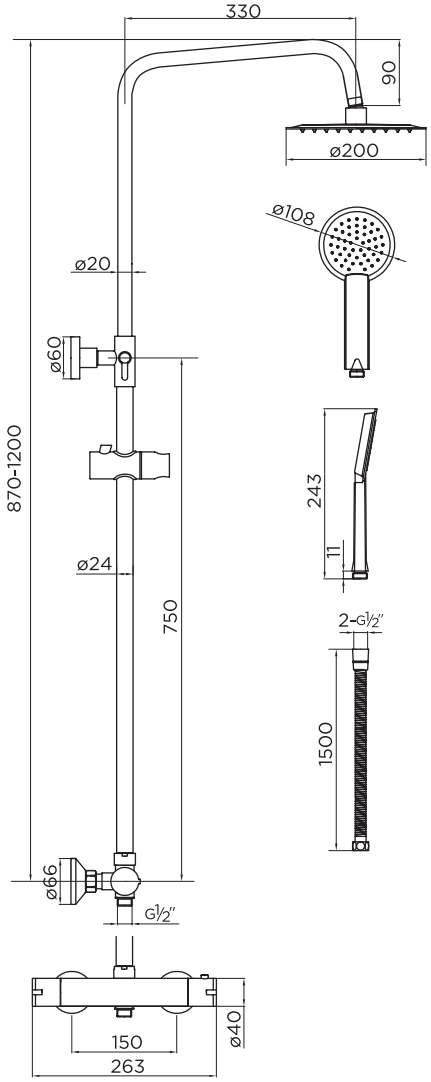

ADDITIONAL INFORMATION

- Dual Control – flow and temperature are controlled separately giving accurate control of both.
- Thermostatic cartridge maintains showering temperature to +/- 2c giving a stable outlet temperature.
- Built-in Divertor
- Automatic shut-off in the event of cold water supply failure, to prevent scalding.
- Temperature factory set to a 38^{c} to eliminate the ability to select an unsafe temperature without overriding.
- Supplied with a 1.5m hose, 200mm top shower head and multi-function handset.
- Lifetime guarantee

FLOW RATES (litres per minute)

0.5 Bar	1 Bar	3 Bar
8.7	12.3	22.6

WORKING PRESSURES (bar)

Min Pressure	Max Pressure	Best Performance
0.5	10	3

niagara

North Dean Road | West Lane | Keighley | West Yorkshire | BD22 6QY
t: 01535 613830 | www.niagarabathrooms.co.uk