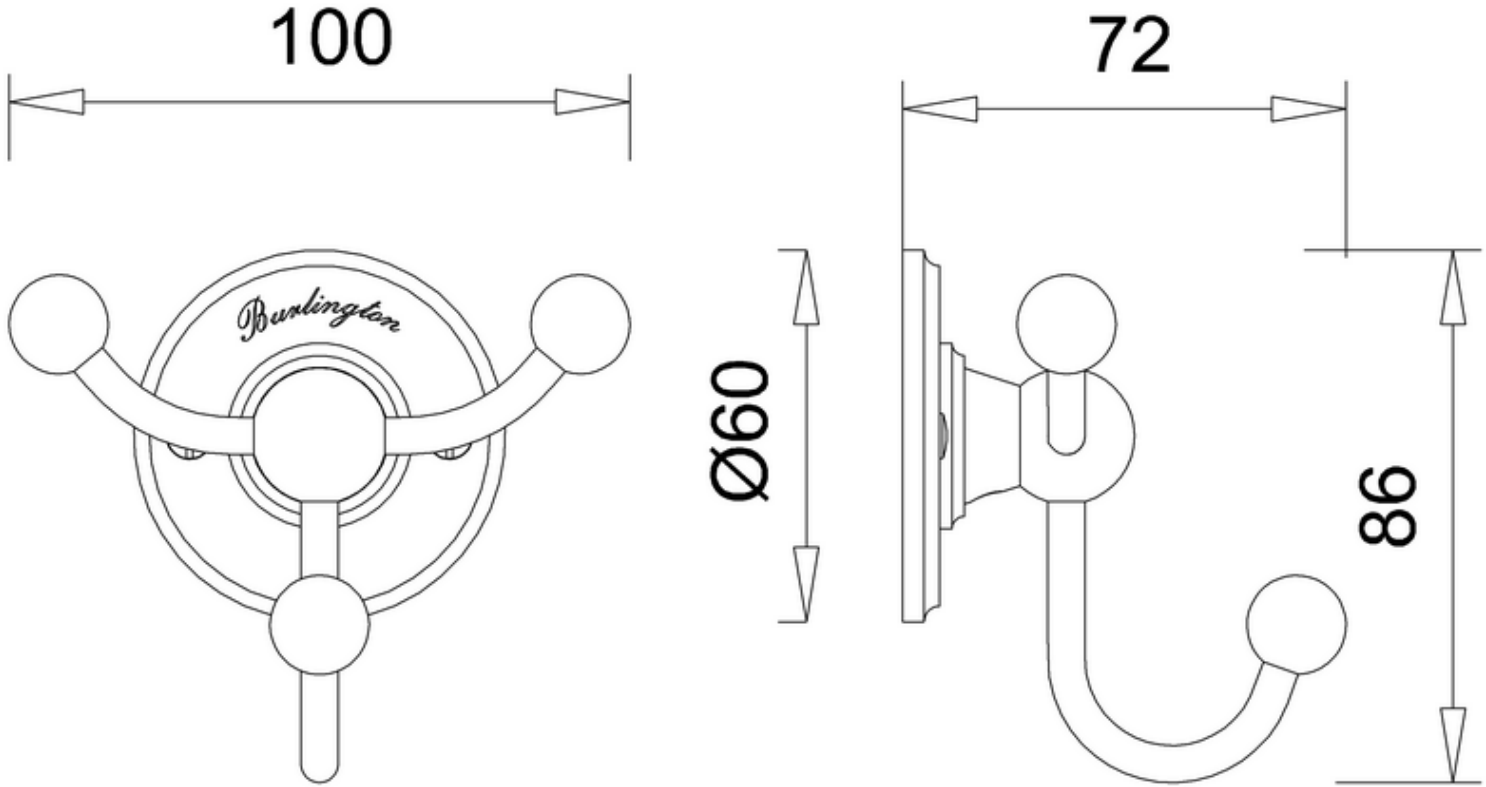
100
Burlington
72
Ø60
86