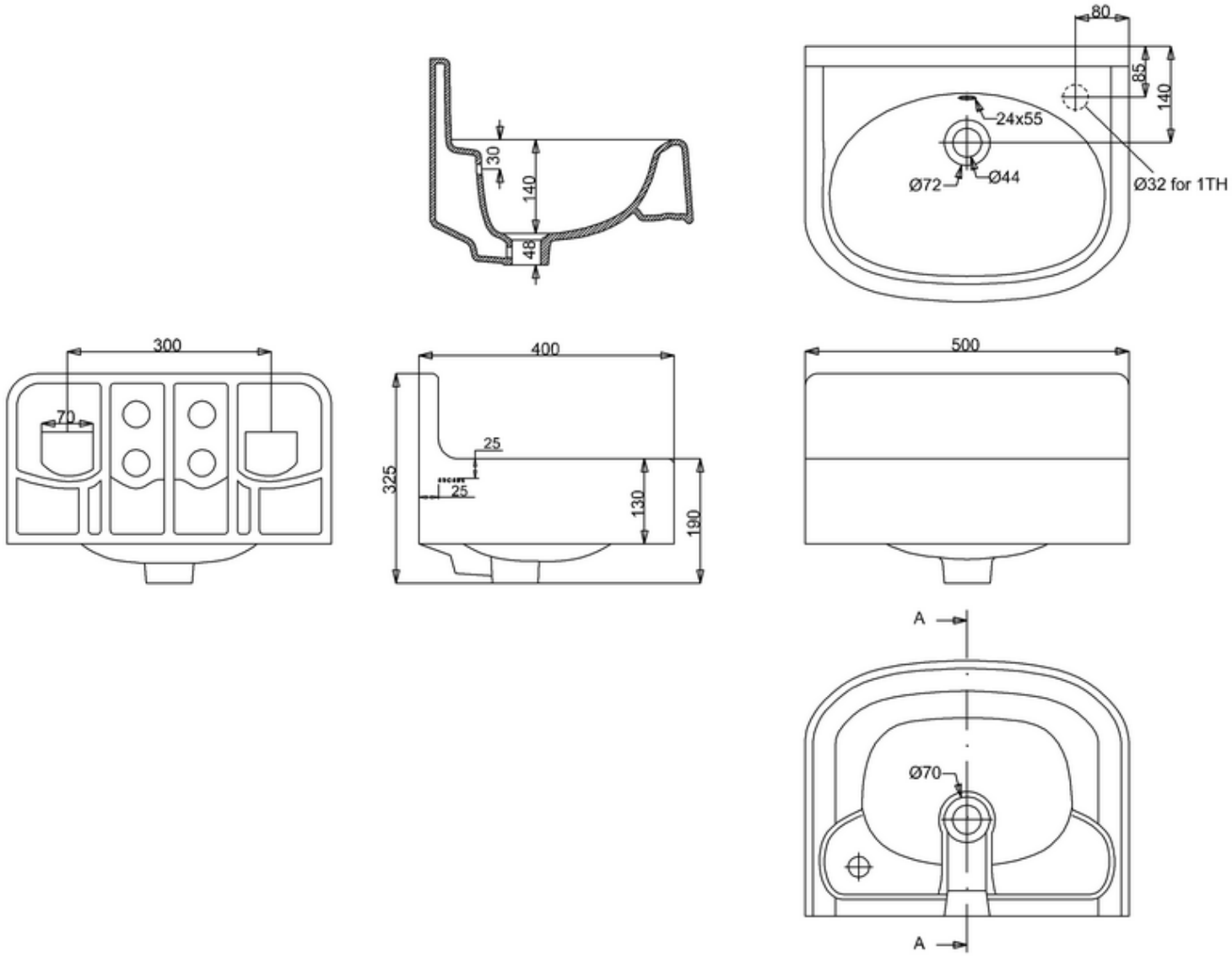
80
85
140
24x55
Ø72
Ø44
Ø32 for 1TH
30
140
48
300
70
400
325
25
25
130
190
500
A
Ø70
A