TECHNICAL DATA SHEET

ROXOR

Sales Code: Cpa005

Description: Arlo W/H Pan And Soft Close Seat

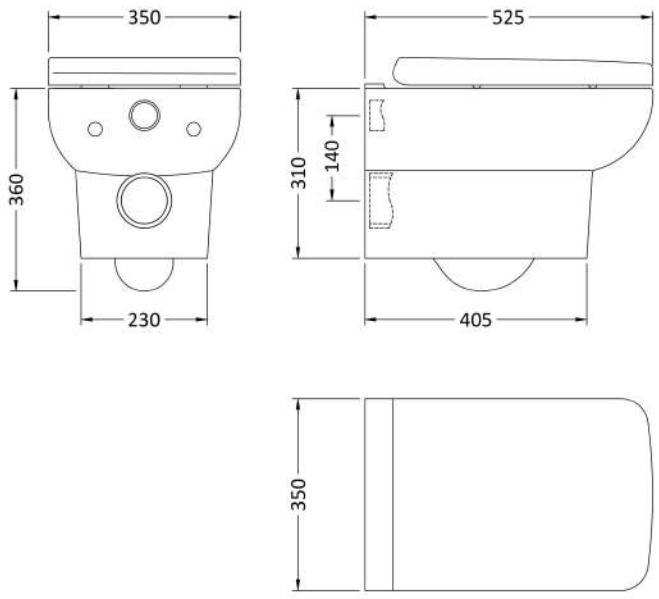

Packaging Details

Barcode: 5055369031535

Sales Code: NCU799

Description: Soft Close Seat

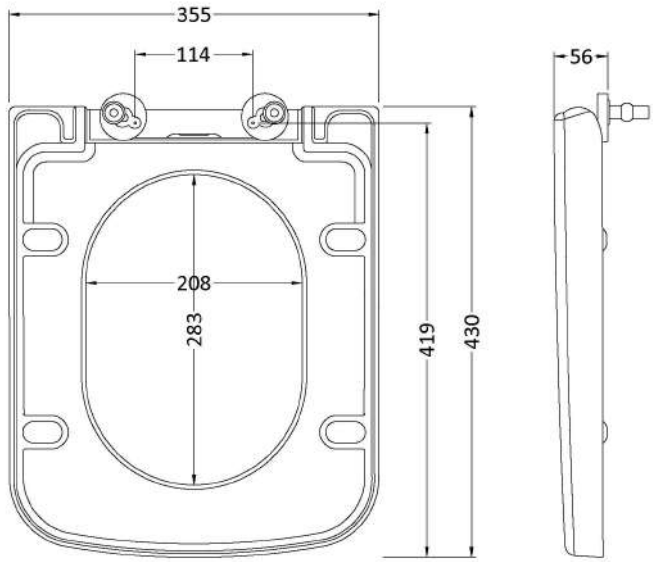

Product Dimensions	
Length (mm):	430
Width (mm):	355
Height (mm):	56
Nett Weight (kg):	2.5
Packaging Dimensions	
Length (mm):	500
Width (mm):	365
Height (mm):	65
Gross Weight (kg):	2.75
Packaging Data	
Box Colour:	White Cardboard Box - Printed
Box Qty:	1
Label Size:	100 x 50
Label Colour:	Not Applicable
Label Qty:	1
Outer Box Dimensions (If Applicable)	
Length (mm):	390
Width (mm):	470
Height (mm):	480
Gross Weight (kg):	
Barcode:	5055369030996
Product Details	
Country of Origin:	Turkey
Fitting Instruction:	No
CE & UKCA:	Not Applicable
Product Material:	Polypropylene
Seat Type:	Square
Seat Function:	Soft Close
Hinge Centres (Min):	150
Hinge Centres (Max):	186
Hinge Material:	Polypropylene
Colour/Finish:	White
Fixing Method:	Top Fix

TECHNICAL DATA SHEET

ROXOR

CERAMICS

Sales Code: NCU700C

Description: Square W/H Pan

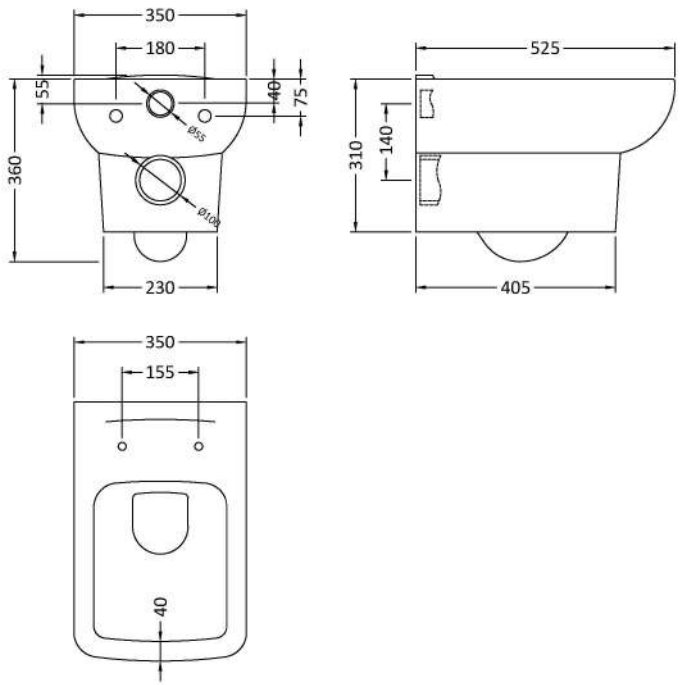

Product Dimensions	
Height (mm):	360
Width (mm):	350
Depth (mm):	525
Nett Weight (kg):	20.5
Packaging Dimensions	
Height (mm):	410
Width (mm):	555
Depth (mm):	375
Gross Weight (kg):	21
Packaging Data	
Box Colour:	Brown Cardboard Box - Printed
Box Qty:	1
Label Size:	100 x 50
Label Colour:	White Label
Label Qty:	2
Outer Box Dimensions (If Applicable)	
Height (mm):	
Width (mm):	
Depth (mm):	
Gross Weight (kg):	
Barcode:	5055369031009
Product Details	
Country of Origin:	Turkey
Fitting Instruction:	No
Certification: CE & UKCA: Yes	WRAS: N/A WRAS No: N/A
Product Material:	Vitreous China
Fixing Supplied:	No

Pans/Bidets: Trap Style: P Trap Includes Seat: No

Seats: Seat Type: Square Material: Not Applicable
Function: Not Applicable Hinge Type: Top Fix
Hinge Material: Not Applicable

Cisterns: Operating Type: Not Applicable Fittings: Not Applicable
Lever Type: Not Applicable

Basins: Tap Hole: Not Applicable Chain Stay Hole: Not Applicable
Template: Not Applicable Waste Type Req: Not Applicable
Overflow Inc: Not Applicable Overflow Cover: Not Applicable
Inner Bowl Depth (mm): N/A