TECHNICAL DATA SHEET

ROXOR

CERAMICS

Sales Code: CT415TF1000

Description: Counter Top Sink 1.5 Bowl 1010X525

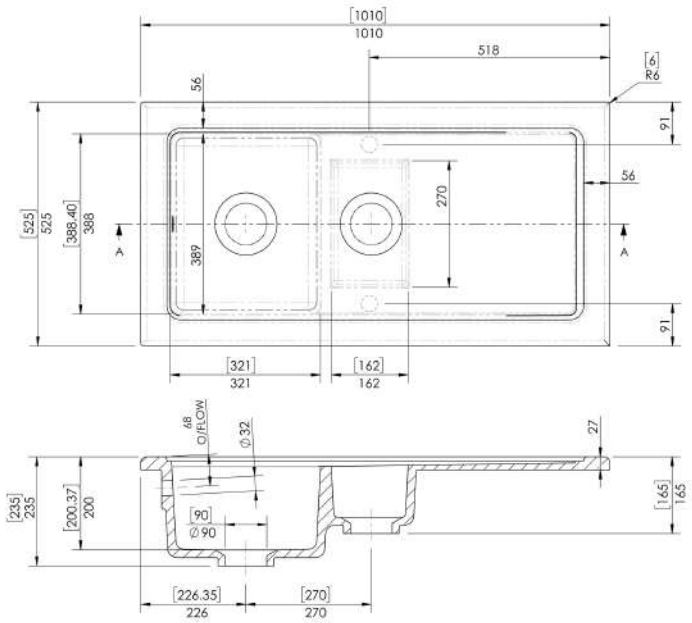

Product Dimensions	
Height (mm):	235
Width (mm):	1010
Depth (mm):	525
Nett Weight (kg):	29.5
Packaging Dimensions	
Height (mm):	240
Width (mm):	1100
Depth (mm):	510
Gross Weight (kg):	30
Packaging Data	
Box Colour:	Brown Cardboard Box
Box Qty:	1
Label Size:	100 x 50
Label Colour:	White Label
Label Qty:	2
Outer Box Dimensions (If Applicable)	
Height (mm):	
Width (mm):	
Depth (mm):	
Gross Weight (kg):	
Barcode:	5056678435113
Product Details	
Country of Origin:	Utd.Arab.Emir.
Fitting Instruction:	No
Certification: CE & UKCA:	WRAS: WRAS No:
Product Material:	
Fixing Supplied:	

Pans/Bidets: Trap Style: Includes Seat:

Seats: Seat Type: Material:
Function: Hinge Type:
Hinge Material:

Cisterns: Operating Type: Fittings:
Lever Type:

Basins: Tap Hole: Chain Stay Hole:
Template: Waste Type Req:
Overflow Inc: Overflow Cover:
Inner Bowl Depth (mm): 200