DUAL OUTLET CONCEALED SHOWER VALVE - SQUARE

SKU: DC4 - CHROME
SKU: DC4B - BLACK

MANUFACTURER: THE WHITE SPACE

RANGE: DC THERMOSTATIC SHOWER VALVES

PRODUCT INFORMATION: CONCEALED SHOWER VALVE - SQUARE HANDLE, DUAL OUTLET

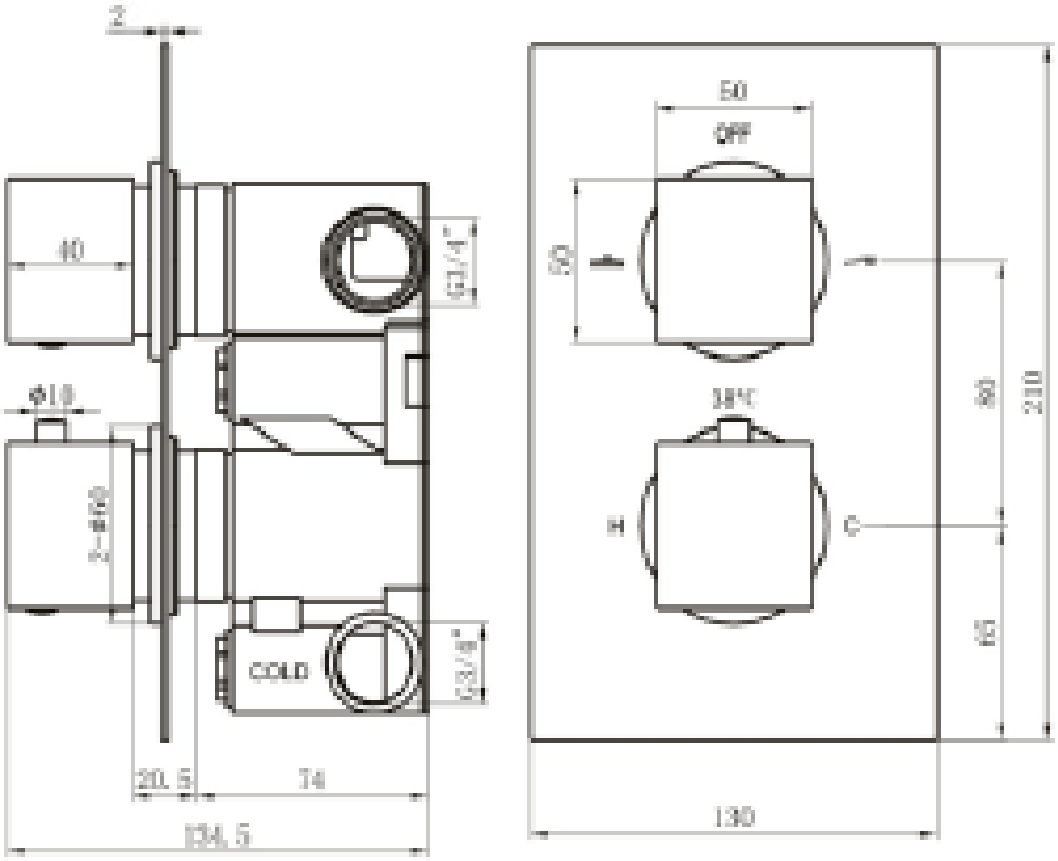

THE WHITE SPACE