STUART TURNER
ENGINEERED TO EXCEL

monsoon
extra

Installation, Operation & Maintenance Instructions

Please leave this instruction booklet with the owner as it contains important guarantee, maintenance and safety information

Read this manual carefully before commencing installation.
This manual covers the following products:

Monsoon Extra U1.4 bar
Pt. No. 46349

Monsoon Extra U2.6 bar
Pt. No. 46593

Monsoon Extra U3.6 bar
Pt. No. 46594

Monsoon Extra U5.0 bar
Pt. No. 46595

FOR POSITIVE OR NEGATIVE HEAD APPLICATIONS

CE compliant product
3year guarantee
ISO 9001
UKAS 001

PRODUCT DESCRIPTION

Electric motor driven centrifugal pump complete with an automatic control system, consisting of flow switch, pressure switch, pressure vessel and electronic control.

APPLICATION

The Monsoon Extra Universal Single range is designed for pressure boosting applications in vented stored, hot or cold, clean water systems, where under gravity, no flow is available and can be used in systems where either a positive or negative head exists.
Inlet pressures to the pump and ambient temperatures must not exceed the values given in the technical specifications.

- **This pump set must not be used for any other application without the written consent of Stuart Turner Limited.**
- **This pump MUST NOT be connected directly to the mains water supply.**
- **This appliance can be used by children aged from 8 years and above and persons with reduced physical, sensory or mental capabilities or lack of experience and knowledge if they have been given supervision or instruction concerning use of the appliance in a safe way and understand the hazards involved. Children shall not play with the appliance. Cleaning and user maintenance shall not be made by children without supervision.**
- **Children should be supervised to ensure that they do not play with the appliance.**
- **This product should not be used for the supply of water to more than one dwelling (house, apartment, flat).**

Please read installation details carefully as they are intended to ensure this product provides long, trouble free service. Failure to install the unit in accordance with the installation instructions will lead to invalidation of the warranty.

STORAGE

If this product is not to be installed immediately on receipt, ensure that it is stored in a dry, frost and vibration free location in its original packaging.

CONTENTS

Page

Checklist 3
Pre-Installation 4
Important Facts - read before commencing installation 5
Location 6
Pump Connections 9
Electrical Installation 10
Commissioning 12
Maintenance 13
Technical Specification 15
Trouble Shooting 17
Guarantee 20

CHECKLIST

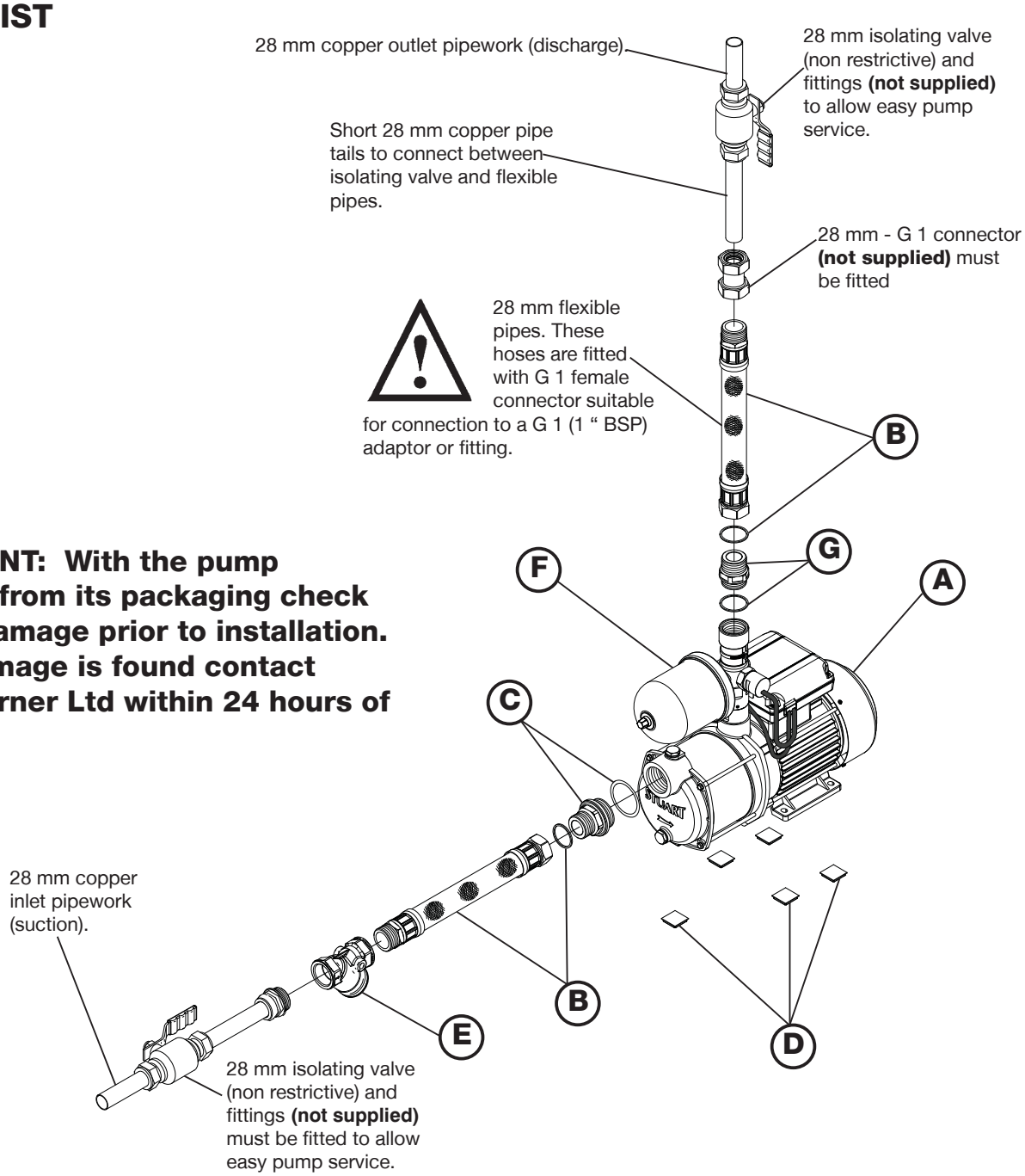

IMPORTANT: With the pump removed from its packaging check for any damage prior to installation. If any damage is found contact Stuart Turner Ltd within 24 hours of receipt.

Fig. 1

Item	Description	Qty	Item	Description	Qty
A	Pump	1	E	Inline strainer	1
B	Hose & sealing washer	2	F	Pressure vessel	1
C	Inlet connector & 'O'-ring	1	G	Outlet connector & gasket	1
D	Anti-vibration feet	5			

Note: Item C & G are supplied loose and will require fitting to the pump inlet/outlet. Tighten to torque 4/5 Nm.
Your product may vary slightly from the picture above.

PRE-INSTALLATION ASSEMBLY

Re-positioning of Pressure Vessel

The pressure vessel can be rotated to alternative positions (Figs. 3 & 4) in the event of the factory fitted position being unsuitable for a specific installation.

a) Remove pressure vessel by unscrewing anti-clockwise.

b) Using a 2 mm allen key (not supplied), carefully loosen all three retaining grub screws by two turns (Fig. 2).

c) **Warning - Care must be taken when re-positioning the pressure vessel to ensure no strain is placed upon the pressure switch or reed switch cables.**
The flow switch assembly can now be carefully rotated to an alternative position (Figs. 3 & 4).

d) Ensure all three grub screws are re-tightened securely to a torque of 2.2 Nm (1.62 ft lbf).

e) Re-fit the pressure vessel ensuring the 'O'-ring seal is in place.

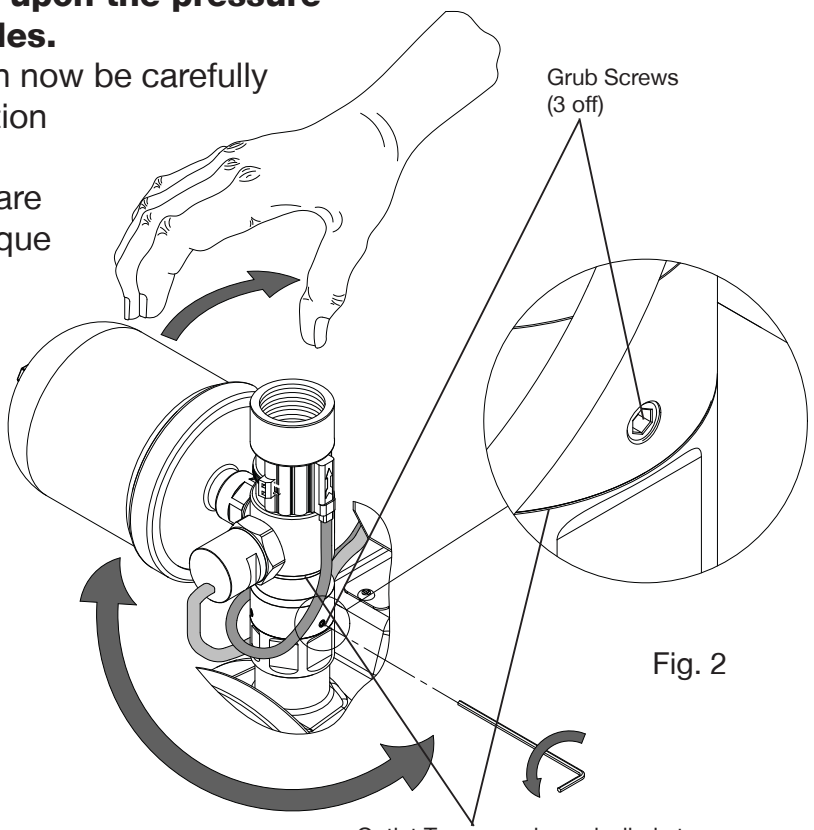

Fig. 2

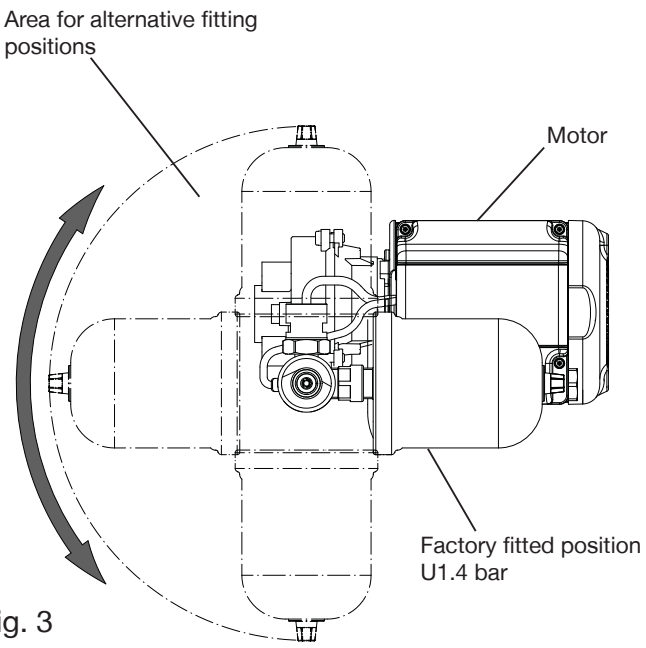

Fig. 3

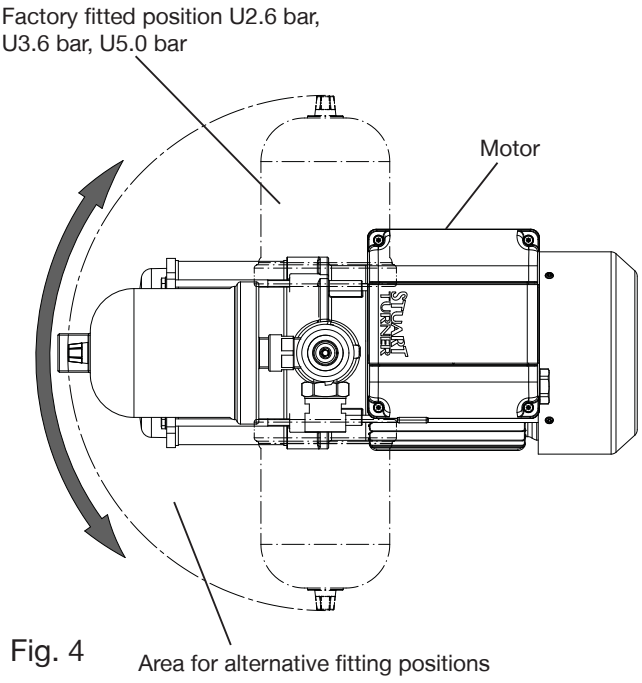

Fig. 4

1 READ BEFORE COMMENCING PUMP INSTALLATION

A. **Water storage capacity**.

1.11 The hot and cold water storage capacity (must be a minimum of 230 litres) and be sufficient to meet the flow rates required by the pumped equipment and any other water using fittings and appliances, which may be operated simultaneously.

1.12 Ensure the pump is primed as described in the priming section before starting, damage to the shaft seal will result otherwise. See Section 5 - Commissioning.

B. **Water temperature**

The water entering the pump must be controlled as follows:

1.13 The maximum allowable water temperature is 65 °C.

1.14 The minimum allowable water temperature is 4 °C.

1.15 **DO NOT** fit a pump if the hot water is heated via a method whereby the water temperature cannot be controlled, such as solar or solid fuel you must consult the PumpAssist team on +44 (0) 844 98 000 97.

C. **Pipework - General**

1.16 **Secure pipework:** Ensure pipework to and from pump is independently supported & clipped to prevent forces being transferred to inlet and outlet branches of pump.

1.17 **Flux:** Solder joints must be completed and flux residues removed prior to pump installation **(flux damage will void any warranty)**.

1.18 **Pipework design:** Care should be taken in the design of pipework runs to minimize the risk of air locks e.g. use drawn bends rather than 90° bends.

1.19 **DO NOT** introduce solder flux to flexible hoses, pumps or pump parts manufactured from plastic.

1.20 **DO NOT** allow contact with oil or cellulose based paints, paint thinners or strippers, acid based descalents or aggressive cleaning agents.

1.21 **DO NOT** install a non-return valve, or devices which contain non-return valves, in the suction (inlet) pipework to the pump. The pump must be free to vent to the supply tank at all times.

1.22 **DO NOT** bend the flexible hoses beyond 30°. They must be installed as straight as possible.

1.23 **DO NOT** connect this pump to the mains water supply.

D. **Plumbing Installation Regulations**

1.24 The plumbing installation must comply with “The Water Supply (Water Fittings) Regulations 1999” and “BS 6700” building regulations.

1.25 The plumbing installation must be installed by a qualified person.

1.26 The electrical installation must be carried out in accordance with the current national electrical regulations.

1.27 The electrical installation must be installed by a qualified person.

E. Pressure vessel

1.28 Pressure vessel is charged at the factory see Section 6 - Maintenance for details.

Cont ...

2 LOCATION - GENERAL

2.11 **Access:** For emergencies and maintenance the pump must be easily accessible.

2.12 **Protection:** The pump must be located in a dry position, frost free and protected from freezing, particularly when installed in a loft (not recommended).

2.13 **Ventilation:** Ensure an adequate air flow to cool the pump. Separate the pump from other appliances that generate heat. An 80 mm (3 “) air gap must be maintained around the pump.

2.14 **Safety:** The motor casing can become very hot under normal operating conditions. Care must be taken to ensure it cannot be touched during operation.

2.15 **Water retention:** Site the pump in a location where in the unlikely event of a water leak, any spillage is contained or routed to avoid electrics or areas sensitive to water damage.

2.16 **Static inlet pressure:** Before deciding where to locate the unit check to ensure the static inlet head between pump and cold water level (Figs. 6 & 7) is at least 1 metre and does not exceed the max inlet head of 8 metres for the U1.4 and 10 metres for other models.

2.17 **Ambient temperature:** The pump must be sited in a location where the maximum ambient temperature does not exceed 40 ^{o}C.

2.18 **Pipework:** For optimum performance pipework use 28 mm dia., 22 mm can be used but will result in reduced pump performance.
Pipework should only reduce to 15 mm when entering terminal fitting.

2.19 **Static outlet pressure:** The static outlet head (Figs. 6 & 7) must also be within the maximum requirement of 8 metres for U1.4 and 13 metres for all other models.

2.20 **Noise:** The anti-vibration mounting feet and flexible hoses which are supplied as standard, and a precaution to reduce noise transmission, however care must be taken when mounting the pump that any noise is not amplified through loose panels or pipework. **Do not screw down the pump**.

2.21 **Direction of flow:** Ensure the water flow is in the direction of the arrow marked on the flow switch reed clamp (vertically upwards).

2.22 **Flexible hoses:** Use only Stuart Turner supplied hoses.

2.23 **Isolating valves:** Separate system isolating valves (non restrictive) must be fitted to allow easy pump service.

2.24 **Preferred pump location:** The pump must, for optimum performance, be sited as close as possible to and never more than 4 metres from the HOT WATER cylinder. The pump should always be sited BELOW the HOT WATER take-off from the cylinder. The pump location is also dependent on limitations of the static inlet and outlet heads of the installation. For guidance on limitations and recommended location, consult the following relevant section for hot or cold water installation.

Cont ...

2.25 **Non-Preferred Pump Location:** The pump must be located with at least 1 metre flooded suction at all times.
If it is not possible to locate the pump in the preferred area due to site limitations and it is necessary to position the unit in the loft, or in a position above the secondary tapping that feeds the pump, then there is an increased risk of air locks. This risk must be eliminated.
The following method will help to overcome the problem:
A “U” bend or downward loop in the supply pipe to the pump of 350 mm depth before rising to the pump should ensure the cylinder vents its air up the expansion pipe, not up the pump feed (Fig. 5).

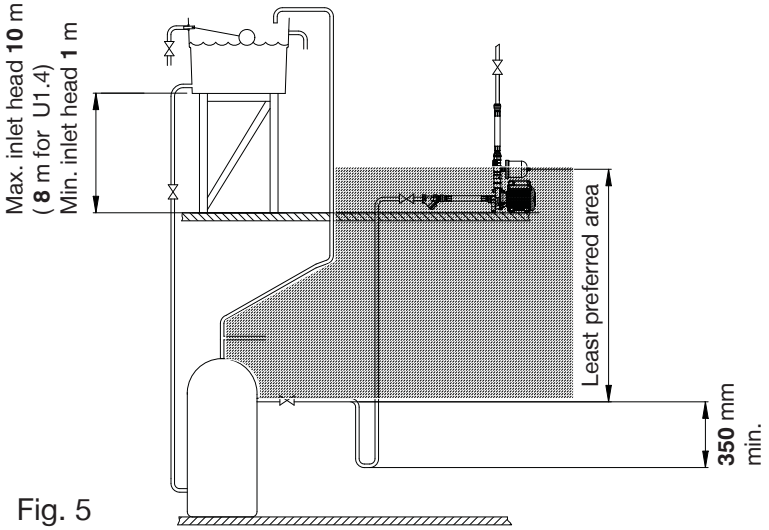

Fig. 5

2 LOCATION - COLD WATER INSTALLATION

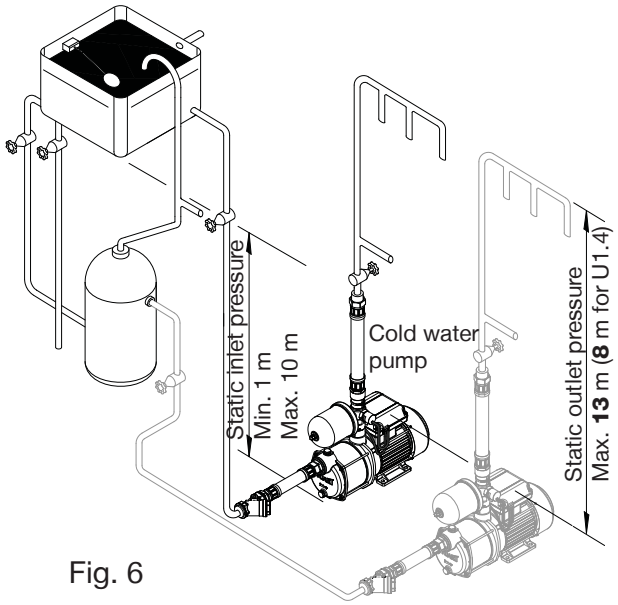

Fig. 6

2.26 **The cold water supply: Must be a DEDICATED AIR FREE** supply via a tank connector, and must be positioned at a slightly lower level (25 mm minimum) than the feed pipe to the hot water cylinder.
Do not connect to the mains.

Cont ...

2 LOCATION - HOT WATER INSTALLATION

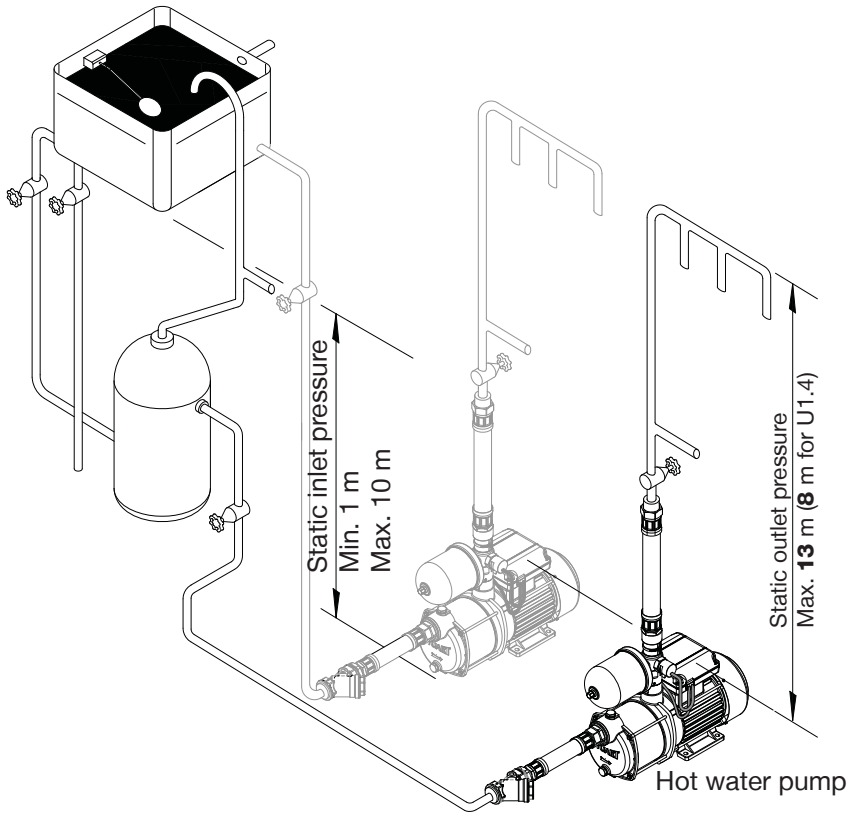

Fig. 7

Hot water connection:

2.27 **Hot water cylinder or storage tank:** When a hot water cylinder or storage tank is used, ensure the pipework size from the cold water storage to the hot water storage is of adequate size and a minimum of 28 mm.

2.28 **Hot water supply:** The pump **must be** supplied with a **dedicated feed** direct from the hot water cylinder or storage tank which should be via a secondary dedicated tapping (see Fig. 8).

Do not connect to the mains.

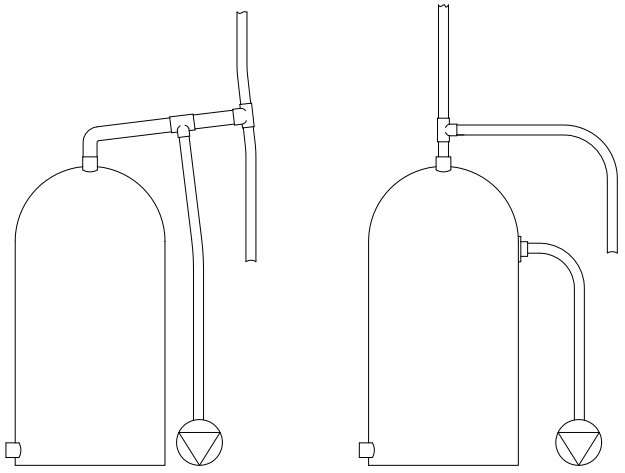

Fig. 8

Off expansion pipe with rising 28 mm offset reducing to 28 mm pipework to pump and expansion pipe.

Factory installed secondary tapping with 28 mm pipework to pump.

Cont ...

3 PUMP CONNECTIONS

3.11 **Hose to pump:** These pumps have G 1 threaded connections to accept the hoses supplied. The hose end is made water tight with a sealing washer on assembly, nip tight to 4/5 Nm for water tight seal (**Do not overtighten**).

3.12 **Hose to pipework:** Hoses terminating in G 1 threaded connections are supplied and when securing the male end to a suitable pipe fitting, seal with PTFE tape or other suitable sealant.

Cont ...

4 ELECTRICAL INSTALLATION / EARTHING

4.11 **Regulations:** The electrical installation must be carried out in accordance with the current national electrical regulations and installed by a qualified person.

4.12 **Safety:** In the interests of electrical safety a 30 mA residual current device (**R.C.D. not supplied**) should be installed in the supply circuit. This may be part of a consumer unit or a separate unit.

4.13 Before starting work on the electrical supply ensure power supply is isolated.

4.14 **DO NOT** allow the supply cord to contact hot surfaces, including the motor shell, pump body or pipework. The cord should be safely routed and secured by cable clips.

4.15 **Adjacent pipes:** Adjacent suction and delivery pipes should be fitted with earthing clamps in accordance with current regulations (Fig. 9).

Diagram of earth continuity connections

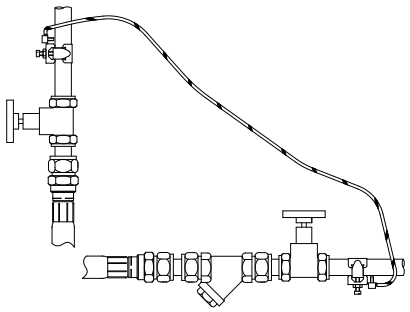

Fig. 9

4.16 **Earthing:** This appliance must be earthed via the supply cord, which must be correctly connected to the earth point located in the terminal box.

4.17 **Pipework:** Copper or metallic pipework must have supplementary earth bonding where the continuity has been broken by flexible hoses or plastic components.

4.18 **Additional earthing:** Certain installations may require additional earthing arrangements such as equipotential bonding. Reference should be made to the relevant regulations concerning this subject to ensure compliance.

4.19 **Connections:** The pump must be permanently connected to the fixed wiring of the mains supply using the factory fitted supply cord, via a double pole switched fused spur off the ring main and **NOT** connected to the boiler or the immersion heater circuits.

4.20 **Wiring of connection unit:**

- **WARNING: This appliance must be earthed.**

The wires in the mains lead are coloured in accordance with the following code:

Green and Yellow: Earth Blue: Neutral Brown: Live

As the colours of the wires in the mains lead of this appliance may not correspond with the coloured markings identifying the terminals in your connection unit proceed as follows:

The wire which is coloured green and yellow must be connected to the terminal in the connection unit which is marked with the letter E or by the earth symbol: ⏚ or coloured green or green and yellow.

The wire which is coloured blue must be connected to the terminal which is marked with the letter N or coloured black.

The wire which is coloured brown must be connected to the terminal which is marked with the letter L or coloured red.

4.21 **Wiring Diagrams:**

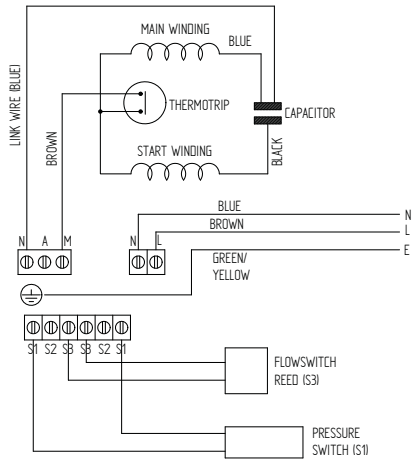

Monsoon Extra U1.4 bar Single
Fig. 10

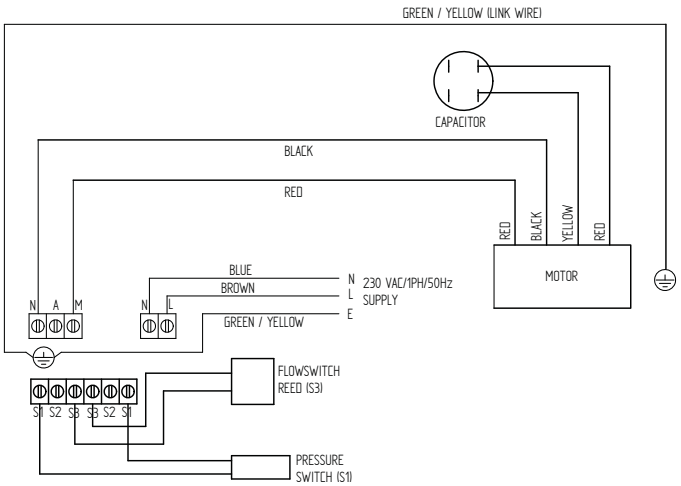

Monsoon Extra U2.6, U3.6 & U5.0 bar Single
Fig. 11

4.22 **Fuses:** The following fuse size should be used with the appropriate pump:

Model	Fuse Size (AMPS)
Monsoon Extra U1.4 bar	5
All Models	13

4.23 **Supply Cord Replacement:**

The supply cord and internal wiring within the terminal box are routed and secured to ensure compliance with the electrical standard EN 60335-1. It is essential that prior to any disturbance of this internal wiring, all cable routing and securing details are carefully noted to ensure re-assembly to the same factory pattern is always maintained.

If the supply cord is to be changed or is damaged, it must be replaced with a special cord assembly available from Stuart Turner or one of their approved repairers.

On disassembly note the cord retention and routing system. Re-assemble to the same pattern.

For information on cable connection consult the wiring diagram and cable gland fitting instructions.

4.24 **Cable Gland Fitting Instructions:**

To enable correct assembly of the cable gland the 'O'-ring (Fig. 12 item 1) must be placed over the cable before the clamping insert (Fig. 12 item 2) can be tightened.

Note: Cable diameter range:- 6.5 mm to 9.5 mm.

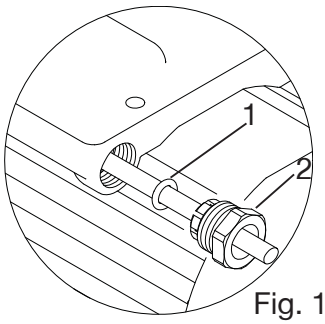

Fig. 12

4.25 **Supply Cord Extension:**

The pumps are fitted with a supply cord to the following specification:-

All models . . . . . HO5VV-F3 G 0.75 mm² - 6 Amp rated cable.

If the supply cord is to be extended, a cord of the same specification should be used. Any connections or junction boxes used should be specifically suited for the application and installed in accordance with the manufacturers instructions.

5 COMMISSIONING / SYSTEM FLUSHING/ PRIMING / STARTING

5.11 **System Flushing:** The pipework system should be flushed out prior to the pump being connected to ensure any contaminants/ chemical residues and foreign bodies are removed from elsewhere in the system.

5.12 **Water Supply:** Always ensure that water storage capacity is adequate to meet the demand. Ensure the pump chamber is full of water before starting the pump. Failure to do this could result in seal damage. To ensure dry running does not occur the pump must be primed as described in priming section below. **Do not run pump dry.**

5.13 **Priming:**

Never operate pump with inlet and/or outlet isolating valves in the closed position. Damage will occur!

The pump must be primed (filled with water) before starting.
Turn on the service valves and vent/prime pump head.

(a) Loosen priming plug and allow an even flow of water this may take a few seconds.
(b) Re-seal draining plug, nipping tight. The pump is now ready to start.

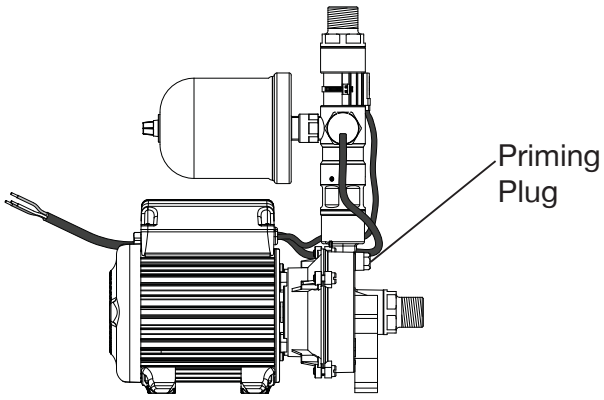

U1.4 bar Single Fig. 13

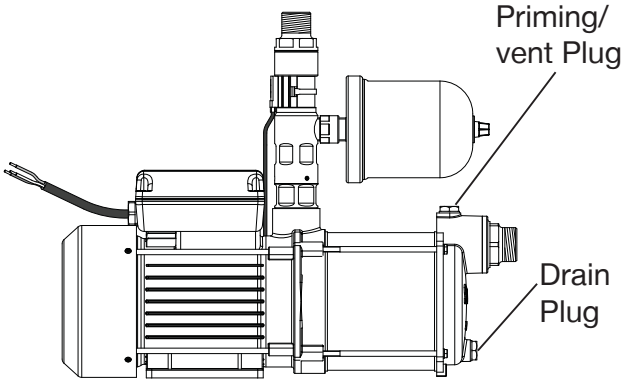

U2.6, U3.6 and U5.0 bar Single Fig. 14

5.14 **Starting:**

a) Ensure all outlets are closed, turn power supply 'on' - pump will start, pressurise the system then stop.
b) Open and close all outlets in turn associated with the pump, (including w/c systems) allowing water to flow from each outlet until all air is purged. As each outlet is opened and closed, the pump will start and stop respectively. Note: After closing the outlet there will be a small time delay before the pump stops, which is normal.
c) Any tap or control valve within the system when opened and closed will now turn the pump on/off. Providing this is the case the system is now operating correctly.
d) Carefully check pump and pipework for leaks whilst pump running and stationary before leaving the installation unattended.

5.15 **For Further Technical Support:** Phone the Stuart Turner PumpAssist team on +44 (0) 844 98 000 97. Our staff are trained to help and advise you over the phone.

6 MAINTENANCE

6.11 Turn off water supplies to the pump and release pressure by opening water outlets before attempting maintenance.

6.12 **Inlet strainer:** Incorporated in the strainer is a removable gauze filter which may require periodic cleaning. The frequency of this operation is dependent upon installation conditions.
The strainer is located in the inlet pipework to the pump (Fig. 15). The gauze filter is removed as follows:-

a) Isolate pump electrically.
b) Release all system pressure.
c) Isolate water supply.
d) Remove screwed hexagonal plug from strainer body taking care to collect or absorb any residual water (Fig. 15).

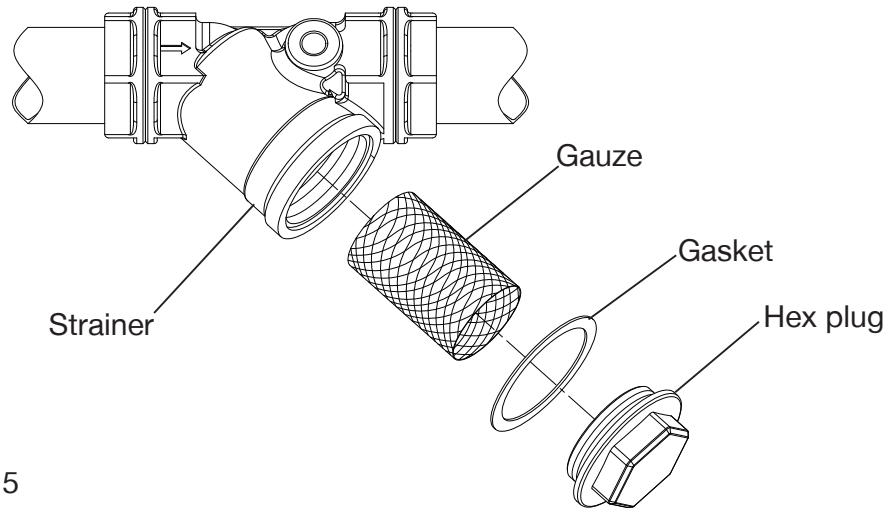

Fig. 15

e) Remove and clean stainless steel gauze filter.
f) Reassemble gauze and secure plug tightly.
g) Turn on water supplies, connect power supply and test.

6.13 **Pressure vessel:** The pressure vessel should be checked once every 6 months to have its air charge checked or replenished, this should be carried out as follows:-

a) Isolate pump electrically.
b) Isolate the water supply by closing the appropriate isolating valves.
c) Release system water pressure by opening an outlet on the system.
d) Remove pressure vessel from the pump taking care to collect or absorb any residual water using towels.
e) Check air charge at Schrader valve (Fig. 16) using a tyre pressure gauge.
f) Replenish air charge by injecting air into the vessel via the Schrader valve using a car or bicycle pump (Fig. 16).
g) Reassemble pressure vessel to pump hand tight to achieve a water tight connection. Ensure sealing 'O'-ring is in place.
h) Close all system outlets, open inlet and outlet isolating valves.
i) After maintenance is completed refer to Section 5 - Commissioning for instructions on re-starting pump.

Cont ...

Model	Air Charge bar (psi)
U1.4	0.9 (13)
All other models	2.1 (30)

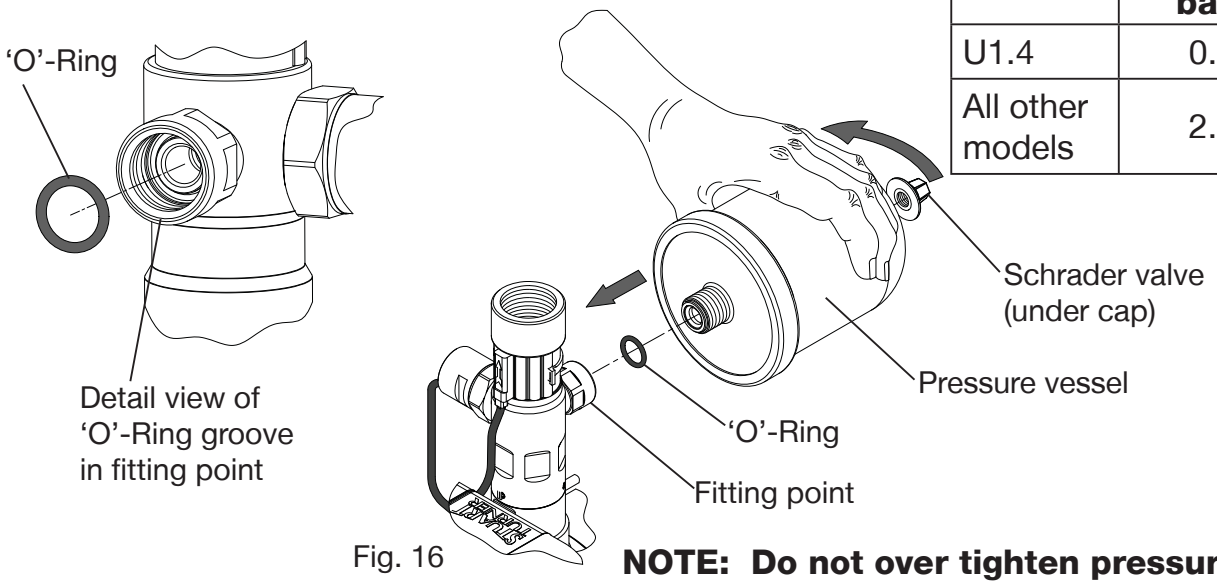

Fig. 16

NOTE: Do not over tighten pressure vessel.

6.14 **Water scale:** As water is heated scale deposits are released in areas of hard water, scale can cause the mechanical seal to stick if left without use for long periods. The pump must be run for at least 5 minutes every four weeks to "exercise" all working parts. Run on cool water. See Section 7 - Technical Specification for note on water temperature. This particularly applies to guest bathrooms used infrequently.

6.15 **Cleaners, Disinfectants and Descalents:**

Acid based descalents and aggressive cleaning agents must not come into contact with the pump. The pump must be removed from the system prior to the use of these products. The system should be flushed to remove all chemicals before the pump is re-connected. If in any doubt as to the suitability of the chemical solutions, please contact our PumpAssist helpline on +44 (0) 844 98 000 97.

Cont ...

7 TECHNICAL SPECIFICATION

Pump Model		U1.4 bar Single 46349	U2.6 bar Single 46593	U3.6bar Single 46594	U5.0 bar Single 46595
General	Guarantee	3 years			
	WRAS approval	0512134	Approved material		
Features	Pump type	Centrifugal			
	Mechanical seal	Nitrile/Carbon/ Silicon Carbide	EPDM/Carbon/Ceramic		
	Anti-vibration feet	✓	✓	✓	✓
	Inlet strainer(s)	✓	✓	✓	✓
	Flexible hoses	2	2	2	2
	Run on Timer	3 sec	3 sec	3 sec	3 sec
	Dry run protection	✓	✓	✓	✓
Performance	Maximum head (closed valve)	1.4 bar	2.6 bar	3.6 bar	5.0 bar
	Performance @ 45 l/min	1.2 bar	2.0 bar	3.3 bar	4.7 bar
	Performance @ 90 l/min	0.7 bar	1.2 bar	2.0 bar	3.0 bar
	Maximum flow	120 l/min		125 l/min	135 l/min
	Maximum static inlet pressure	8 metres	10 metres		
	Maximum static outlet pressure	8 metres	13 metres		
	Maximum working pressure*	500 kPa (5 bar)	600 kPa (6 bar)	900 kPa (9 bar)	900 kPa (9 bar)
	Maximum ambient air temperature	40 °C			
	Min / Max water temperature**	Min 4 °C / Max 65 °C			
	Flow switch sensitivity (approx)	1.0 l/min			
	Pressure vessel air pre-charge	0.9 bar (13 psi)	2.1 bar (30.5 psi)		
	Cut in flow	1 l/min (approx)			
	Cut in pressure	80 kPa (0.8 bar)	180 kPa (1.8 bar)		
Connections	Pump connections	G 1 male			
Flexible hoses	Connections	G 1 male x G1 female x 300 mm long			
Motor	Type	Induction type, thermally protected			
	Duty rating	Continuous S1			
Electrical	Power supply / phase / frequency	230 V a.c. / 1 / 50 Hz			
	Current (full load)	1.8 Amps	3.5 Amps	5.1 Amps	7.3 Amps
	Power consumption	415 Watts	775 Watts	1136 Watts	1630 Watts
	Fuse rating	5 Amps	13 Amps		
	Power lead (pre-wired)	1.5 metres	0.75 metres		
Physical	Enclosure protection	IPX4	IPX5		
	Length	273 mm	394 mm	418 mm	469 mm
	Width	159 mm	155 mm		187 mm
	Height (excluding hoses)	338 mm	312 mm		332 mm
	Weight (including fittings)	8.7 Kg	12.7 Kg	15.1 Kg	18.2 Kg

Stuart Turner reserve the right to amend the specification in line with its policy of continuous development of its products.

*Note: The maximum pressure that can be applied to the pump under any installation conditions.

Cont ...

**Note: A stored water temperature of 60°C is considered sufficient to meet all normal requirements and will minimize deposition of scale in hard water areas.

7.11 **Noise:** The equivalent continuous A-weighted sound pressure level at a distance of 1 metre from the pump does not exceed 70 dB(A).

Cont ...

8 TROUBLE SHOOTING GUIDE

Symptoms	Probable Cause	Recommended Action
Pump will not start.	Electrical supply.	Check power supply. Check fuse (see fuse section). Check circuit breaker is set. Check wiring connections.
	Pump Jammed.	If motor 'Buzzes' switch off power and contact Stuart Turner.
	Damaged pressure switch.	Turn off power. Release system water pressure. Turn on power, pump should start. If NOT contact Stuart Turner.
	Recommended static inlet/ outlet heads exceeded.	Re-position pump (see pump location section).
	Internal motor thermotrip activated.	Wait for thermotrip to auto-reset and check that duty point and run time is within specification (see technical specification).
Reduced/intermittent flow.	Incorrect or no anti-aeration flange fitted	Check that the installation complies with installation instructions.
	Incorrect pipe sizes.	Check for correct pipe sizing, see Page 6 - Section 2.18.
	Blocked inlet filters.	Clean inlet filters (see maintenance section).
	Air in system.	Run system on full hot for several minutes. Check that vents are fitted as detailed in instructions.
	Hot water temperature set too high.	Reduce cylinder stat setting to 60 °C max.
	Blocked shower head spray plate	Clean in accordance with manufacturers instructions.
No hot water.	Air locked water feed.	Vent hot water pump of air. Check cold feed to hot water cylinder. Check water level in cold water tank and that all stopcocks and isolating valves are open.
	Heat source not operating.	Check boiler is switched 'on'. Check cylinder thermostat. Check immersion heater. Check cylinder contains hot water.
	All hot water has been used.	Check tank volume is adequate.
	Faulty thermostatic mixer valve.	Consult makers instructions.
Pump runs on with outlets closed.	Leak in system.	Check tap washers, w/c valve washers, pipe joints.
	Damaged reed switch, P.C.B or pressure switch.	If pump continues to run, this indicates a closed circuit in either the flow switch reed, pressure switch or P.C.B. in the terminal box. Contact Stuart Turner.
	Jammed flow switch.	Remove outlet hoses and check that flow switch sits in lowest position. Check float for free movement.
or Pump cycles (hunts) on/off frequently.	Low pressure in pressure vessel.	Check pressure in pressure vessel (see maintenance section).
	Debris under non-return valve sealing face.	Run at full flow to try and flush away debris or remove, clean or replace non-return valve.
Flexible hose leaks	Not fitted correctly.	Check that the hose is pushed firmly onto the pump inlet/ outlet connections and pipework.
	Damaged 'O'-rings.	Check copper pipe ends are cleanly cut and deburred.

Cont ...

8.11 **Dry Run Protection:**

This pump is fitted with a safety control circuit, which will detect the following fault condition:

- **Dry running caused by water starvation to the pump.**

Should the pump run out of water it will stop as part of a “protective logic sequence”, detailed below.
The fault should be rectified before re-starting the pump. Check that there is sufficient water supply to the pump and also ensure that all terminal fitting outlets are closed.

8.12 **Protective Logic Sequence:**

If water starvation occurs and the power supply to the pump remains uninterrupted, the pump controller will perform the following protective sequence.

1. If the pump detects water starvation, it will stop operation after a 1 minute period.
2. The pump will remain in the off condition for a period of 5 minutes.
3. The pump will then re-start and if the water starvation condition remains present, the pump will then stop operation after a 1 minute period.
4. The pump will remain in the off condition for a period of 5 minutes.
5. The pump will then re-start and if the water starvation condition remains present, the pump will then stop operation after a 1 minute period.
6. The pump will remain in the off condition for a period of 5 minutes.
7. The pump will then re-start and if the water starvation condition remains present, the pump will then stop operation after a 1 minute period.
8. After three consecutive resets are performed the pump will remain in the off condition indefinitely.
9. To restart the pump, the power supply should be first isolated for a period of at least 10 seconds before switching on again.

If the pump fails to operate normally after **three attempts**, then please consult the PumpAssist team on +44 (0) 844 98 000 97.

8.13 **Fault Finding:**

The PCB is also fitted with a “power on” indicator light. This will remain illuminated when mains power is supplied to the board.
The indicator light is located on the PCB within the terminal box.

- **This operation should only be carried out by a qualified person**

To view the light the following procedure must be followed:-

- Isolate the mains electrical power supply from the pump.
- Remove the four screws retaining the terminal box lid (Fig. 17).
- Lift the terminal box lid off.
- **IMPORTANT** – Ensure there is no contact with any of the internal parts of the terminal box.

Cont ...

- Briefly reconnect the mains power supply to the pump – the ‘power on’ light should illuminate if the pump has been correctly wired.
- Isolate the mains electrical power supply from the pump.
- Re fit the terminal box lid ensuring no cables are trapped.
- Re fit the four terminal box lid retaining screws, tighten to 0.8 Nm.

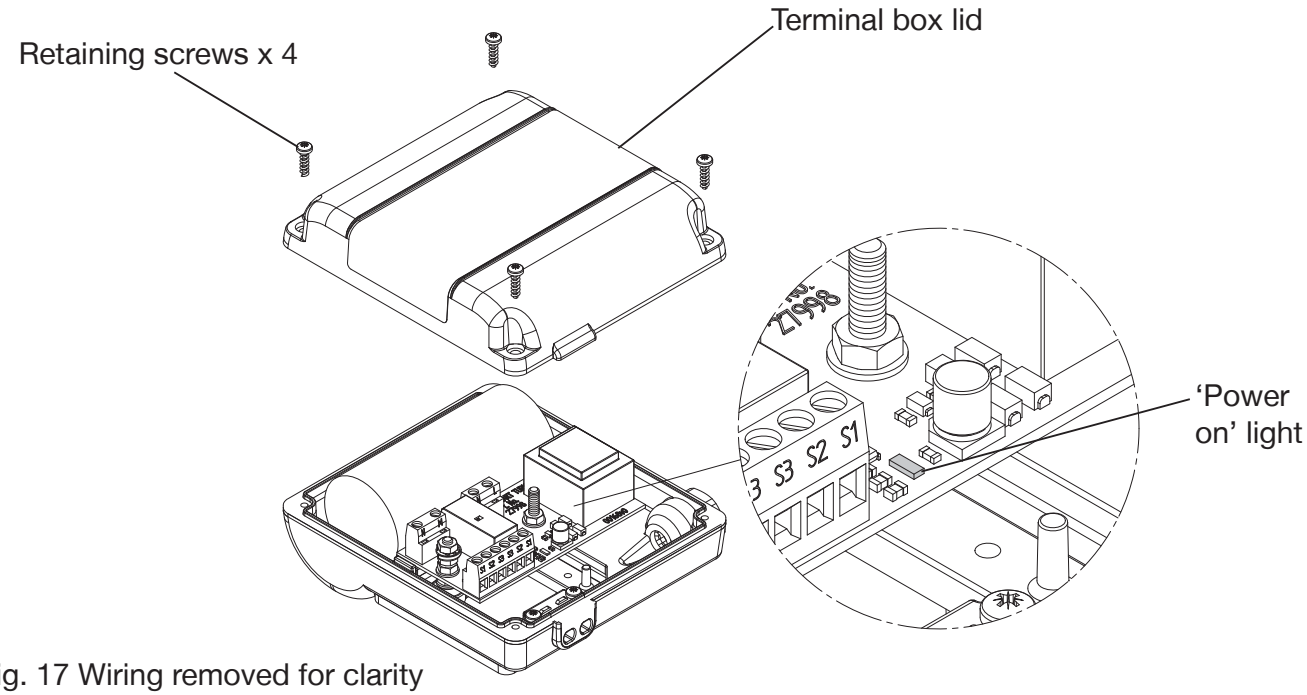

Fig. 17 Wiring removed for clarity

8.14 **Environment Protection:** Your appliance contains valuable materials which can be recovered or recycled.
At the end of the products’ useful life, please leave it at an appropriate local civic waste collection point.

Cont ...

9 THE MONSOON EXTRA GUARANTEE

Congratulations on purchasing a Stuart Turner pump.

We are confident this pump will provide many years of trouble free service as all our products are manufactured to the very highest standard.

All Monsoon Extra pumps are guaranteed to be free from defects in materials or workmanship for 3 years from the date of purchase.

Within the guarantee period we will repair, free of charge, any defects in the pump resulting from faults in material or workmanship, repairing or exchanging the whole unit as we may reasonably decide.

Not covered by this guarantee: Damage arising from incorrect installation, improper use, unauthorised repair, normal wear and tear and defects which have a negligible effect on the value or operation of the pump.

Reasonable evidence must be supplied that the product has been purchased within the guarantee term prior to the date of claim (such as proof of purchase or the pump serial number).

This guarantee is in addition to your statutory rights as a consumer. If you are in any doubt as to these rights, please contact your local Trading Standards Department.

In the event of a claim please telephone **'PumpAssist'** or return the pump with the accessories removed e.g pipes etc. If you have any doubt about removing a pump, please consult a professional.

+44 (0) 844 98 000 97

Proof of purchase should accompany the returned unit to avoid delay in investigation and dealing with your claim.

You should obtain appropriate insurance cover for any loss or damage which is not covered by Stuart Turner Ltd in this provision.

Please record here for your records.

TYPE NO.	SERIAL NO.	DATE PURCHASED

Cont ...

Installers – Register with Stuart Turner and move up to Approved Installer status

We receive thousands of enquiries every month from people seeking a Stuart Turner installer and by registering your details with us, we can offer consumers the opportunity to quickly locate an installer in their area.

Registration is free - simply click on the **'register as an installer'** link on our homepage at **www.stuart-turner.co.uk** and complete a short form which will enable visitors to find your contact details on our web site 'installer finder'. Alternatively use your smartphone to scan this QR code and go straight to the form.

We'll do the rest!

In addition we will ensure you receive advance notice on all new product launches and access to any special offers or promotions.

Following initial registration, Stuart Turner offers a professional training programme, enabling you to achieve Approved Installer status and opening the door to a range of additional benefits.

Contact approvedinstaller@stuart-turner.co.uk for further details.

NOTES

NOTES

DECLARATION OF CONFORMITY

2006/42/EC

BS EN ISO 12100-1, BS EN ISO 12100-2, BS EN 809

2006/95/EC

BS EN 60335-1, BS EN 60335-2-41

2004/108/EC

BS EN 55014-1, BS EN 55014-2, BS EN 55022, BS EN 61000-3-2, BS EN 61000-3-3, BS EN 61000-4-2, BS EN 61000-4-3, BS EN 61000-4-4, BS EN 61000-4-5, BS EN 61000-4-6, BS EN 61000-4-11

1999/519/EC

BS EN 62233

2011/65/EU

IT IS HEREBY CERTIFIED THAT THE STUART ELECTRIC MOTOR DRIVEN PUMP AS SERIAL NUMBER BELOW, COMPLIES WITH THE ESSENTIAL REQUIREMENTS OF THE ABOVE E.E.C. DIRECTIVES.

RESPONSIBLE PERSON
AND MANUFACTURER

STUART TURNER LIMITED
HENLEY-ON-THAMES, OXFORDSHIRE
RG9 2AD ENGLAND.

Signed. . . . . Business Development Director

Stuart Turner are an approved company to BS EN ISO 9001:2008

STUART TURNER
ENGINEERED TO EXCEL

Stuart Turner Ltd, Henley-on-Thames, Oxfordshire RG9 2AD ENGLAND
Tel: +44 (0) 1491 572655, Fax: +44 (0) 1491 573704
info@stpumps.co.uk www.stuart-turner.co.uk

Issue No. 1215/2-03 **Pt. No. 19698**