TECHNICAL DATA SHEET

# ROXOR

**Sales Code:** NBH209R

**Description:** Rh Btw Corner Bath & Legs (No Panel)

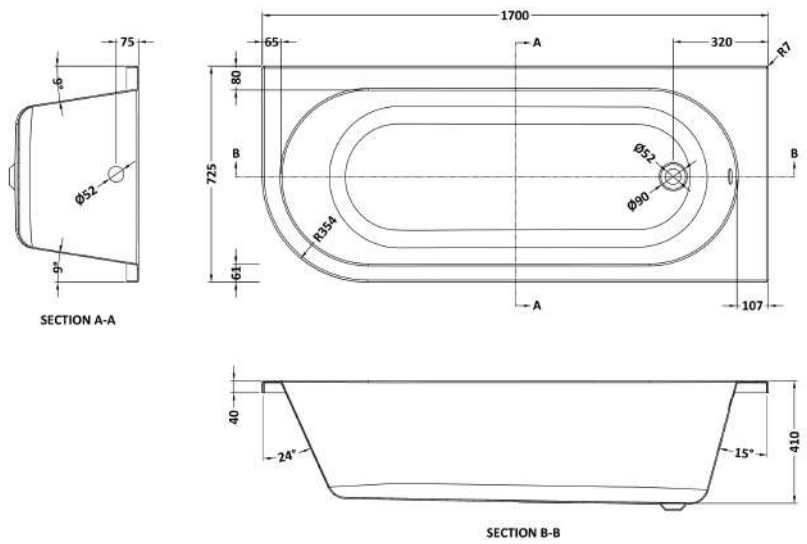


**Packaging Details**

Barcode: 5055275894545

**Sales Code:** NBH209RNL

**Description:** Rh Btw Corner Bath

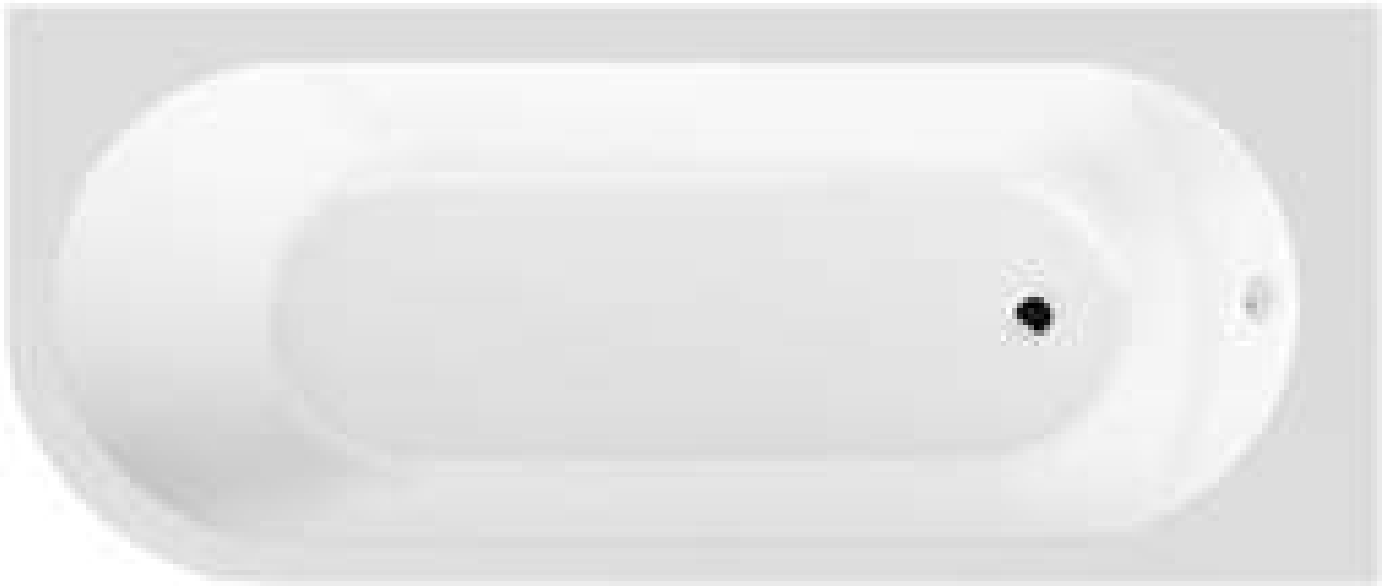

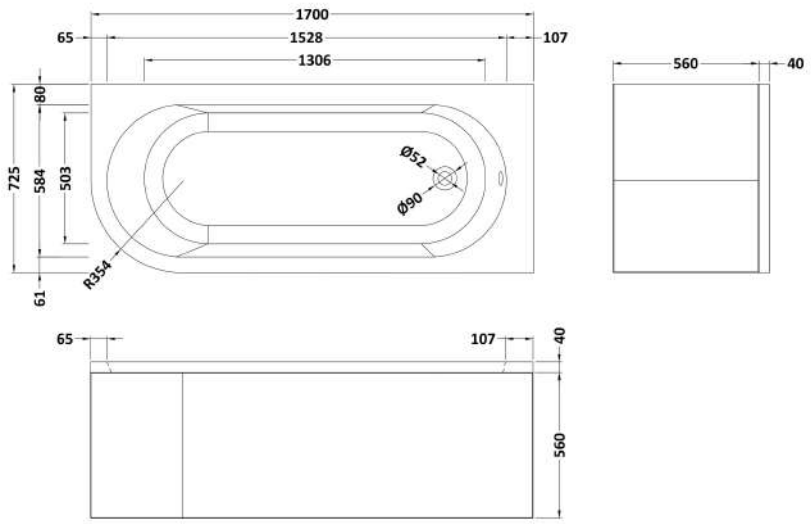


| | |
|---|---|
| **Product Dimensions** | |
| Length (mm): | 725 |
| Width (mm): | 1700 |
| Depth (mm): | 410 |
| Nett Weight (kg): | 24 |
| **Packaging Dimensions** | |
| Length (mm): | 1700 |
| Width (mm): | 725 |
| Depth (mm): | 400 |
| Gross Weight (kg): | 25 |
| **Packaging Data** | |
| Box Colour: | Brown Cardboard Sleeve |
| Box Qty: | 1 |
| Label Size: | 80 x 40 |
| Label Colour: | White Label |
| Label Qty: | 2 |
| **Outer Box Dimensions (If Applicable)** | |
| Length (mm): | |
| Width (mm): | |
| Height (mm): | |
| Gross Weight (kg): | |
| Barcode: | 5055275894545 |
| **Product Details** | |
| Country of Origin: | Poland |
| Fitting Instruction: | No |
| Certification: | FSC: No CE & UKCA: Yes |
| Material Colour Reference: | European White |
| Product Material: | Acrylic |
| Material Thickness: | 4mm |
| Volume (Ltr): | 195L |
| Displaced Capacity: | 120L |
| Leg Set Included: | Legset Not Included |
| Waste Included: | Waste Not Included |
| Drilled/Undrilled: | Undrilled For Taps |
| Includes Grips: | Not Applicable |
| Embossed: | No |
| No of Tapholes: | None |
| Anti-Slip: | No |

**Sales Code:** NBL001

**Description:** Leg Set

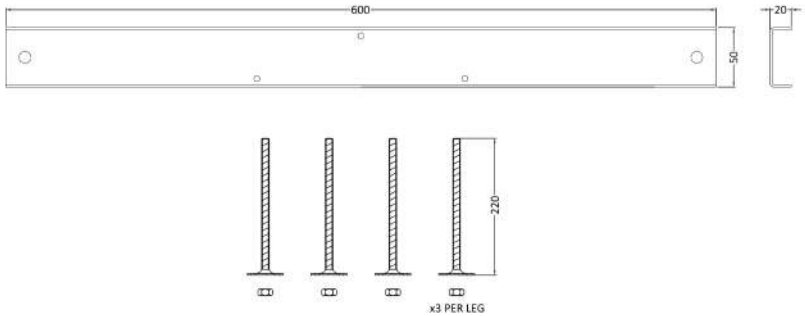


| | |
|---|---|
| **Product Dimensions** | |
| Length (mm): | 570 |
| Width (mm): | |
| Depth (mm): | |
| Nett Weight (kg): | 1.9 |
| **Packaging Dimensions** | |
| Length (mm): | 600 |
| Width (mm): | 60 |
| Depth (mm): | 60 |
| Gross Weight (kg): | 1.9 |
| **Packaging Data** | |
| Box Colour: | Brown Cardboard Box |
| Box Qty: | 1 |
| Label Size: | 50 x 38 |
| Label Colour: | White Label |
| Label Qty: | 1 |
| **Outer Box Dimensions (If Applicable)** | |
| Length (mm): | |
| Width (mm): | |
| Height (mm): | |
| Gross Weight (kg): | |
| Barcode: | 5055275833612 |
| **Product Details** | |
| Country of Origin: | Poland |
| Fitting Instruction: | No |
| Certification: | FSC: N/A CE & UKCA: N/A |
| Material Colour Reference: | Not Applicable |
| Product Material: | Steel |
| Material Thickness: | N/A |
| Volume (Ltr): | N/A |
| Displaced Capacity: | N/A |
| Leg Set Included: | Not Applicable |
| Waste Included: | Not Applicable |
| Drilled/Undrilled: | Not Applicable |
| Includes Grips: | Not Applicable |
| Embossed: | Not Applicable |
| No of Tapholes: | Not Applicable |
| Anti-Slip: | Not Applicable |