Ottone

OT60

500 x 900mm Mirror

- Easy to install and simple to use
- High quality design and build
- Eye catching modern design
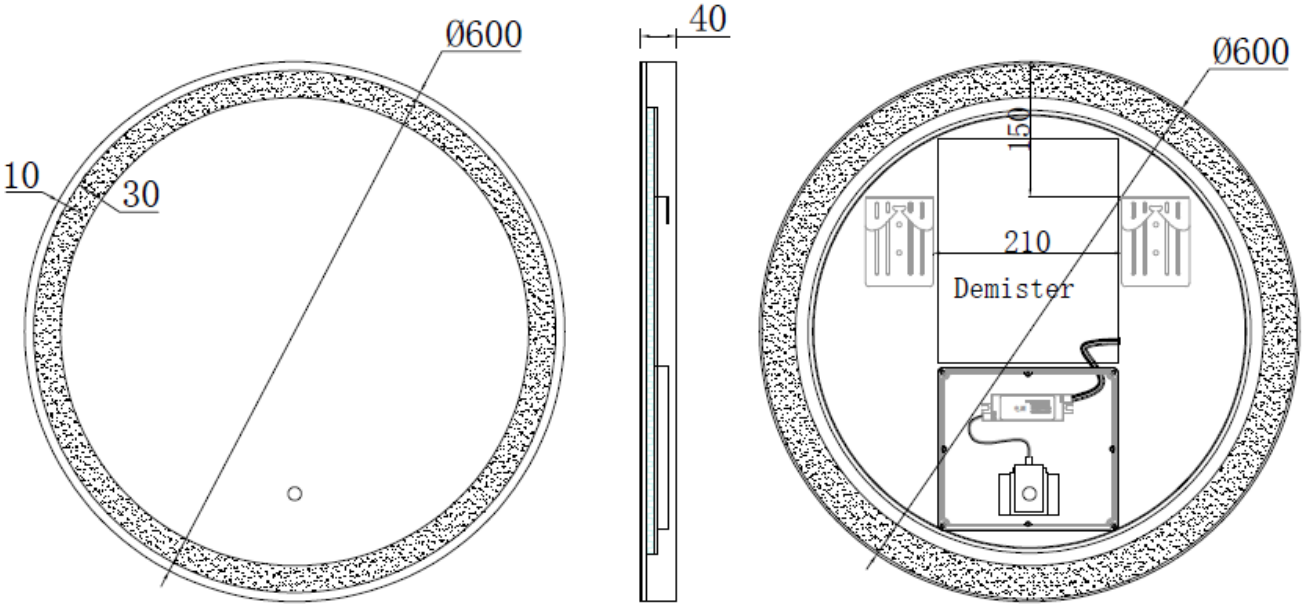
Technical drawing