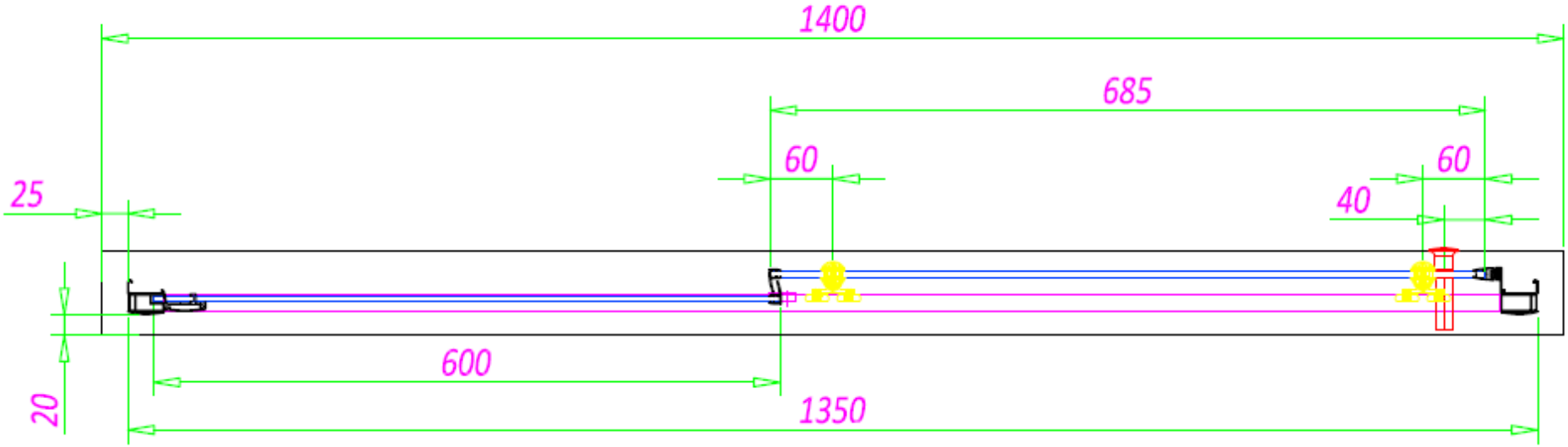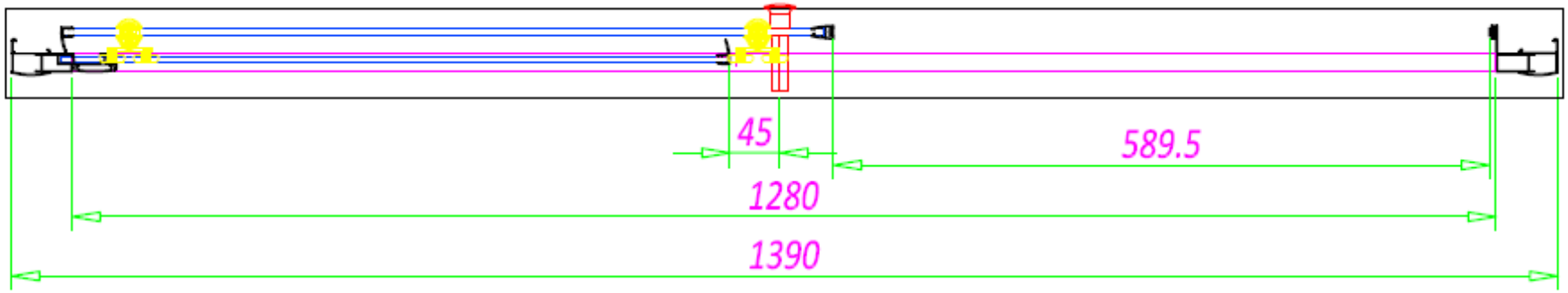Sommer 6 Sliding Door
SOS14 - 1400mm