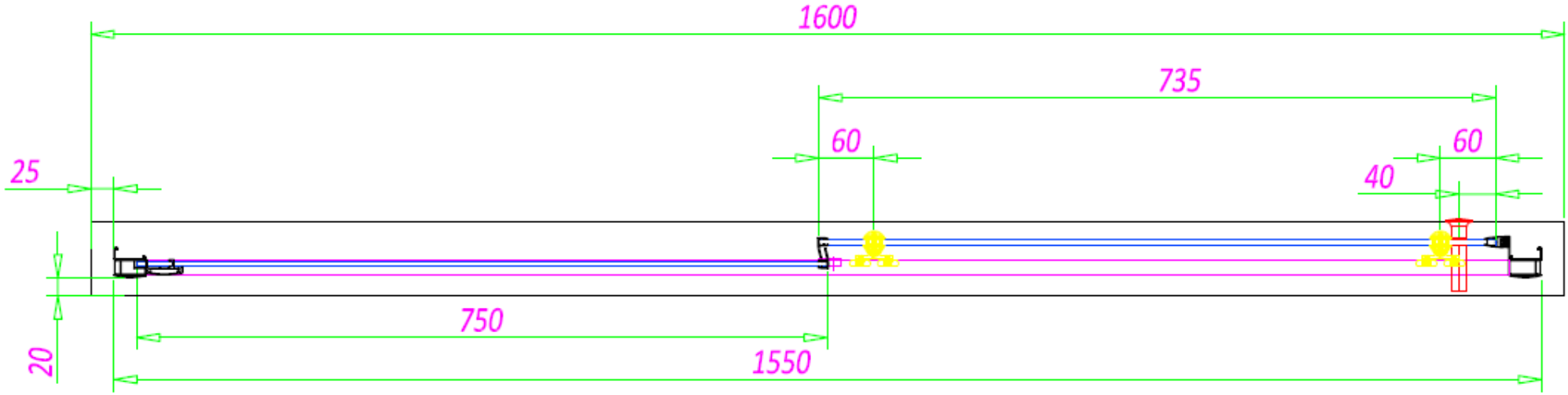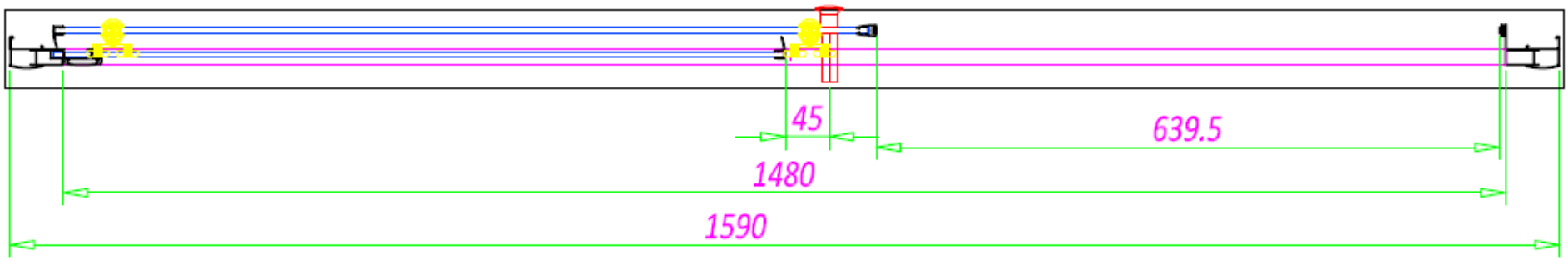Sommer 6 Sliding Door
SOS16 - 1600mm