Technical Datasheet

Product Code: **TSS008**

Product Description: **Trisen Moor Conc Thermo Shower Set CP**

Specification

Product Guarantee:	Lifetime
Barcode:	5056474517280
Packaged Weight (kg):	3.08 kg
Material:	Brass
Style:	Modern
Min Operating Pressure:	1 Bar
Handle Type:	Dial
Valve Type:	Concealed Thermostatic
Flow Rate 0.1 Bar (L/min):	2.7
Flow Rate 0.5 Bar (L/min):	5.9
Flow Rate 1 Bar (L/min):	8.8
Flow Rate 2 Bar (L/min):	13.4
Flow Rate 3 Bar (L/min):	17.4

Key Features

- Handle provides excellent functionality & durability
- Manufactured from high quality brass
- For peace of mind, this product comes with a market leading lifetime guarantee
- High quality, long lasting chrome finish to compliment any style
- Part of our fantastic range of taps & showers available from Trisen

Technical Drawing

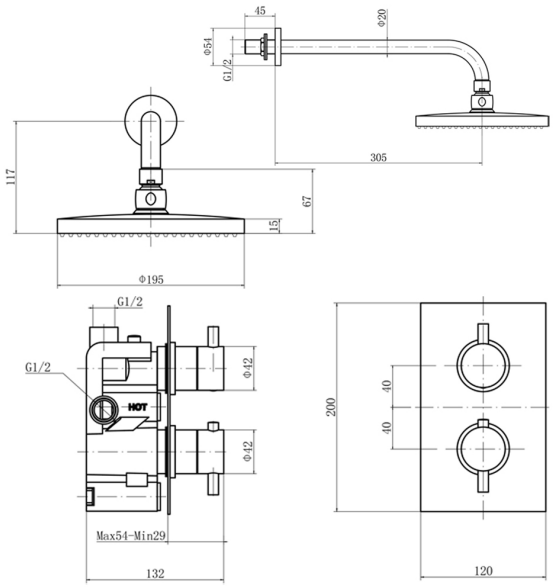

Dimensions: All measurements are in millimetres and are subject to normal manufacturing variations.

Due to a continuing development programme to improve design and performance, we reserve all rights to vary specifications without prior notice. Please note, all accessories are for photographic purposes only.