FREESTANDING BATH - GARDA

PRODUCT	GARDA FREESTANDING BATH
CODE	WSGA16
SIZE	1600 X 750MM
CAPACITY	198L

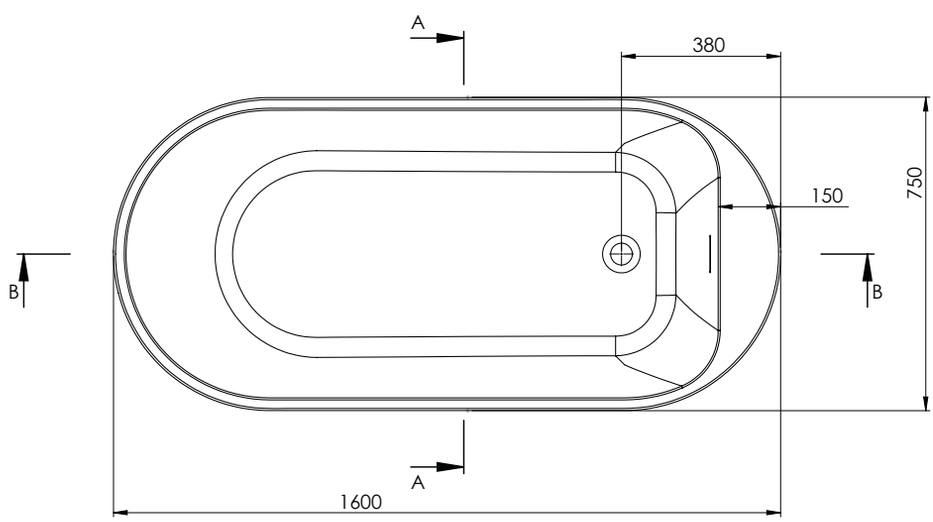

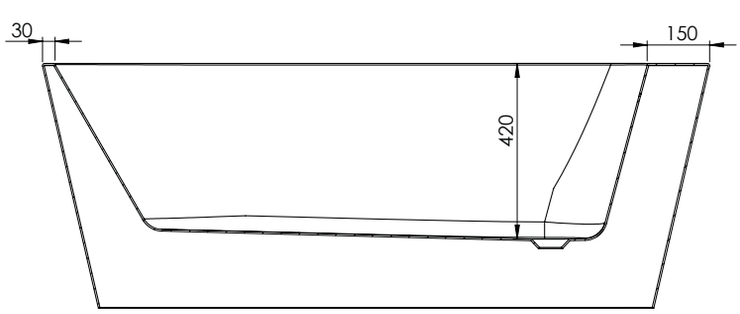

THE WHITE SPACE