FREESTANDING BATH - GARDA

PRODUCT	GARDA FREESTANDING BATH
CODE	WSGA17
SIZE	1700 X 800MM
CAPACITY	240L

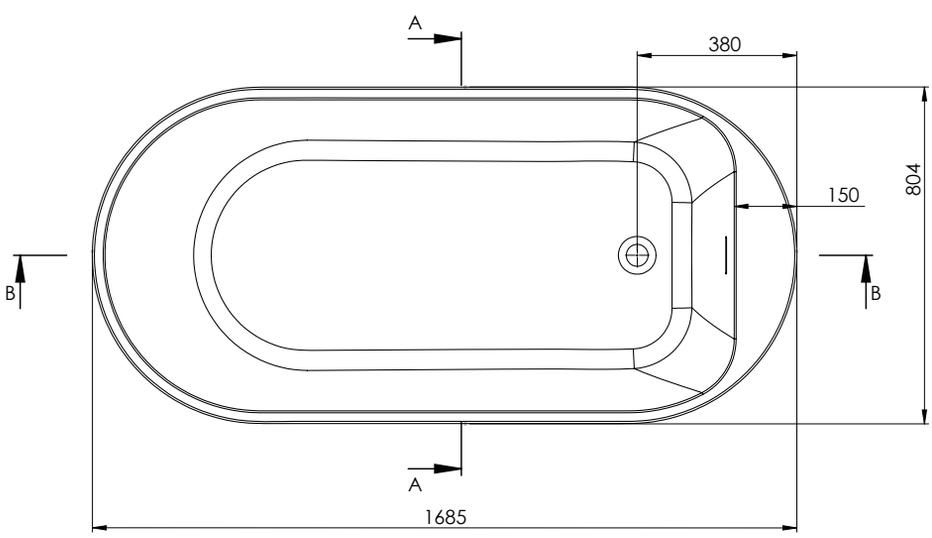

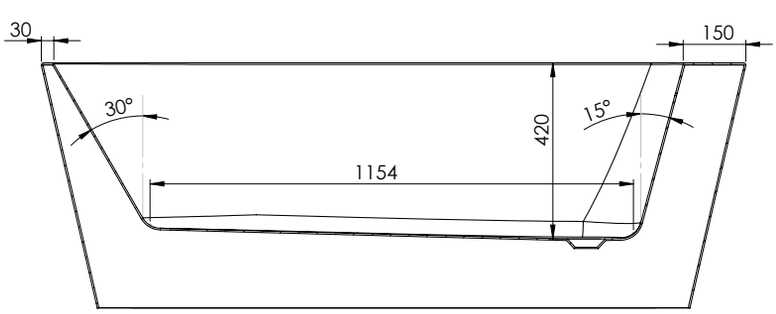

THE WHITE SPACE