YES BAR SHOWER- DUAL CONTROL BAR VALVE WITH SLIDE RAIL

SKU: YES7C - CHROME
SKU: YES7B - MATT BLACK

MANUFACTURER: THE WHITE SPACE

RANGE: YES BAR SHOWER

PRODUCT INFORMATION: DUAL CONTROL BAR VALVE WITH SLIDE RAIL

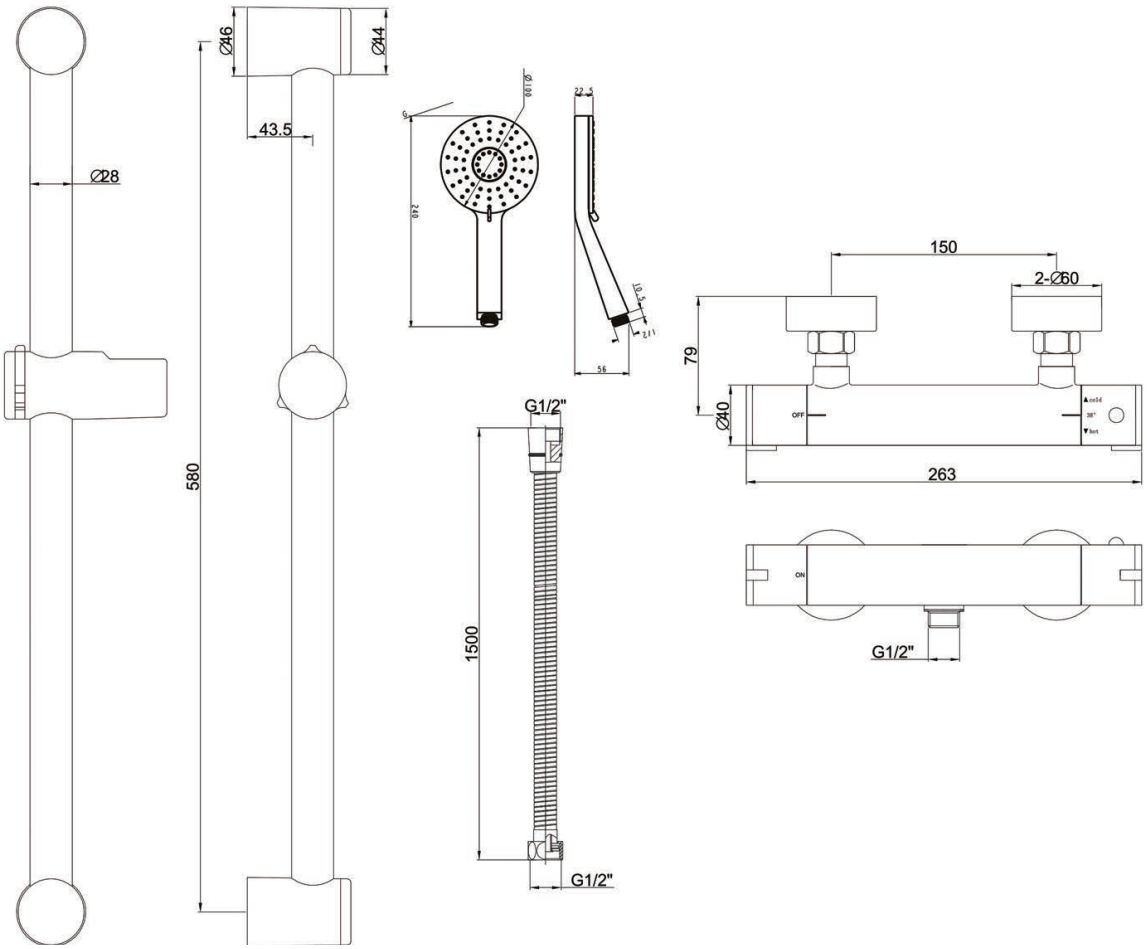

THE WHITE SPACE