LQ375 INSTALLATION INSTRUCTION

INSTALLING ELECTRICAL PRODUCTS IN BATHROOMS

This product must be installed in accordance with the latest version of BS7671: 2008. *If in any doubt consult a qualified electrician*

IPX4 SPLASH PROOF – All our mirrors, cabinets (fitted with a light) are *splash proof and suitable for zone 2*
Our sensor taps are also suitable for zone 2 provided they are installed in accordance with the above standard

Bathroom with bath

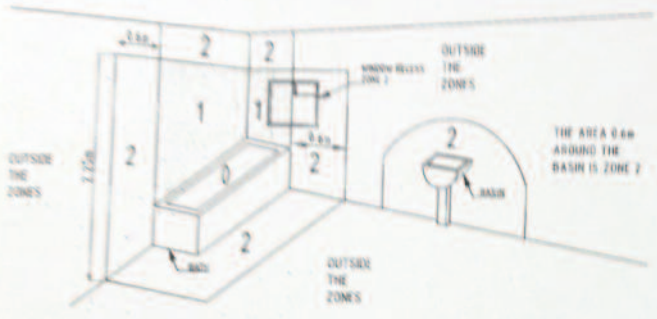

Bathroom with Shower Tray

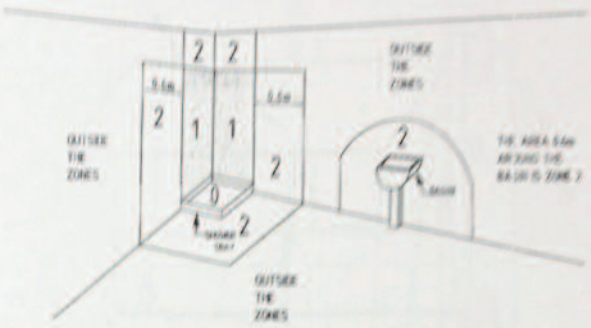

Zone 0 is the smallest volume that contains the bathtub, shower basin, etc.
Zone 1 is the area above Zone 0, up to a height of 2.25 m above the floor.
Zone 2 is the area above Zone 1 up to a height of 3 m, as well as the area that is horizontally within 0.6 m from Zone 1.
If the space under the bath cannot be accessed without using a tool, then that space is considered un-zoned.

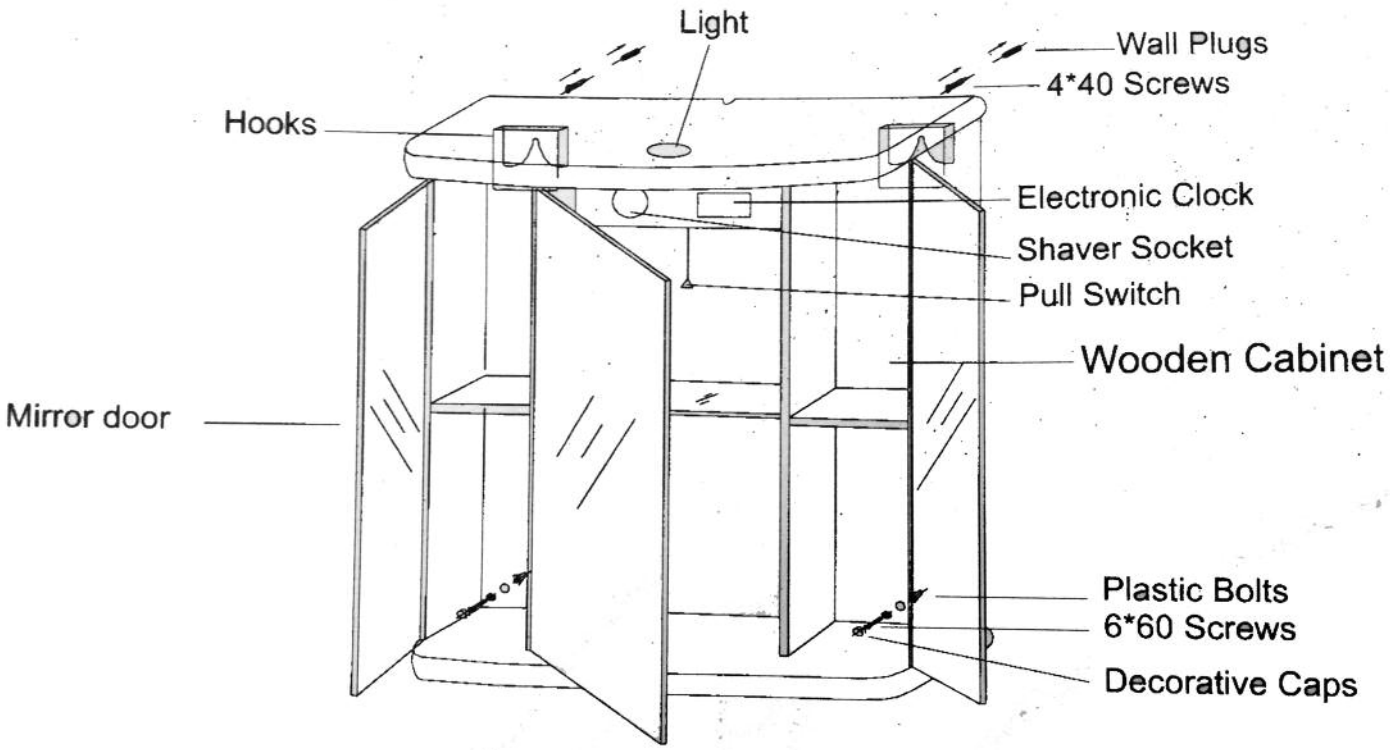
Light
Wall Plugs
4*40 Screws
Hooks
Electronic Clock
Shaver Socket
Pull Switch
Wooden Cabinet
Mirror door
Plastic Bolts
6*60 Screws
Decorative Caps