TECHNICAL DATA SHEET

ROXOR

ENCLOSURES

Sales Code: M800Q-E8

Description: 800 Double Door Quad 8mm

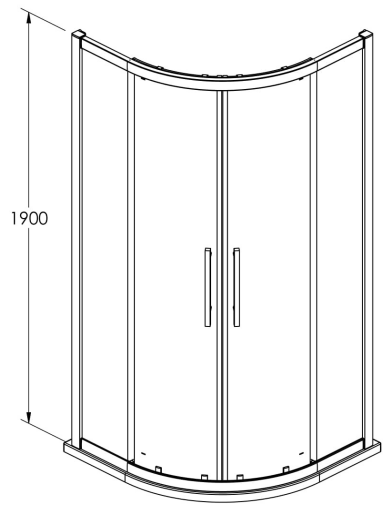

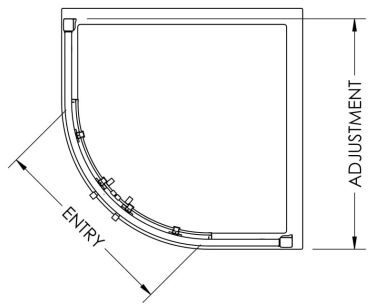

Code	Description	Adjustment (mm)		Entry Width (mm)
M800Q-E8	800 Quadrant	760	780	390
M900Q-E8	900 Quadrant	860	880	520
M1000Q-E8	1000 Quadrant	960	980	520

Product Dimensions	
Height (mm):	1900
Width (mm):	780
Depth (mm):	780
Nett Weight (kg):	52
Packaging Dimensions	
Height (mm):	1960
Width (mm):	430
Length (mm):	150
Gross Weight (kg):	52
Packaging Data	
Box Colour:	Brown Cardboard Box - Printed
Box Qty:	1
Label Size:	100 x 50
Label Colour:	Not Applicable
Label Qty:	0
Outer Box Dimensions (If Applicable)	
Height (mm):	
Width (mm):	
Depth (mm):	
Length (mm):	
Gross Weight (kg):	
Barcode:	5055369080519
Product Details	
Country of Origin:	China
Fitting Instruction:	Yes
CE Approval:	Yes
Profile Material:	Aluminium
Profile Finish:	Polished Chrome
Adjustments (mm):	760mm - 780mm
Entry Width (mm):	390mm
Swing In Dim (mm):	N/A
Swing Out Dim (mm):	N/A
Radius (mm):	538 mm
Glass Thickness (mm):	8
Easy Fit:	Yes
Easy Clean:	Yes
Handle Style:	Square T Shape Handle
Handle Material:	Metal
Enclosure Design:	Framed
Wheel Type:	Chrome, Dual, Quick Release
Support Bar Included:	Support Bar Not Included
Extras:	Screw Cover Strip